Product Specification Sheet

EZCF204-12

Call 800-321-7800 or visit us online at www.nookindustries.com to configure and order your EZCF204-12 today!

2D/3D CAD ONLINE

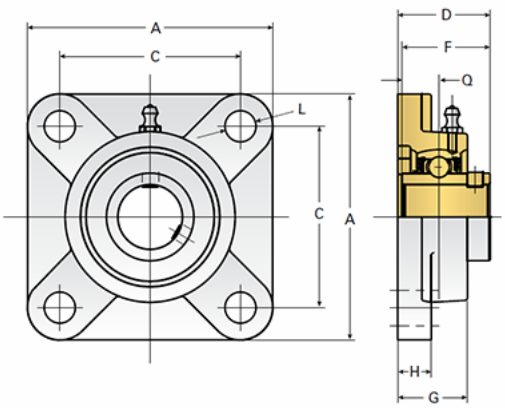

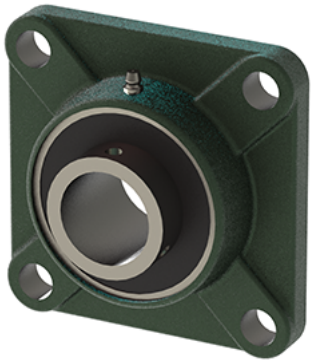

Details	
Bore Diameter [in]	0.75
Dimensions	
A [mm]	86
C [mm]	64
D [mm]	33.3
F [mm]	31
G [mm]	25.4
H [mm]	11
L [mm]	12
Q [mm]	12.7
Product Compatibility Selection	
BSJ	2/2R/3-BSJ
MSJ	-
SS-MSJ	-
EM-BSJ	-
EM-MSJ	-
Bevel	-
Link Shafting	LJ/LJK-12