Product Specification Sheet

EZCP208

Call 800-321-7800 or visit us online at www.nookindustries.com to configure and order your EZCP208 today!

2D/3D CAD ONLINE

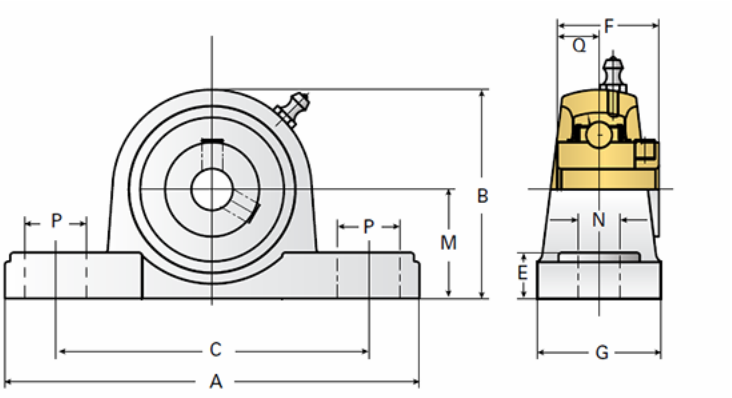

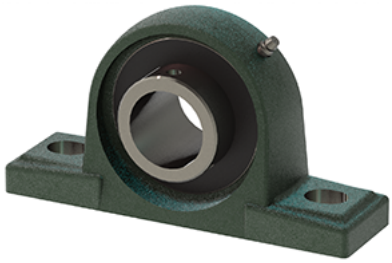

Details	
Bore Diameter [mm]	40
Dimensions	
A [mm]	184
B [mm]	100
C [mm]	137
E [mm]	19
F [mm]	49.2
G [mm]	54
M [mm]	49.2
N [mm]	17
P [mm]	21
Q [mm]	19
Product Compatibility Selection	
BSJ	-
MSJ	-
SS-MSJ	-
EM-BSJ	-
EM-MSJ	-
Bevel	-
Link Shafting	LJT-40