Product Specification Sheet

G1-BSJ-U 3:1

Call 800-321-7800 or visit us online at www.nookindustries.com to configure and order your G1-BSJ-U 3:1 today!

2D/3D CAD ONLINE

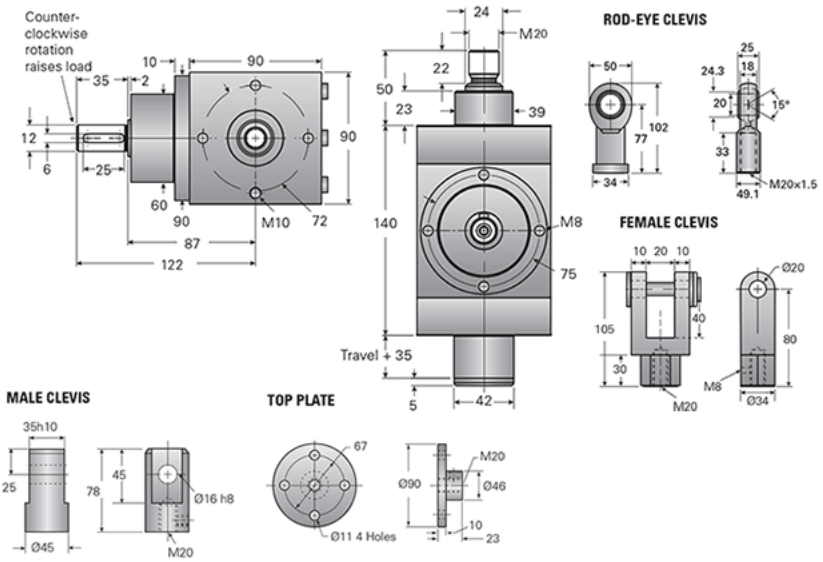

Details	
Capacity [kN]	15
Gear Ratio	3:1
Raise for One Turn of Worm [mm]	1.60
Torque to Raise 1 kN [Nm]	0.34
Tare Drag Torque [Nm]	1.70
Lifting Screw Diameter [mm]	25
Screw Lead [mm]	5
BackDrive Holding Torque [Nm]	1.16
Performance Specifications	
Maximum Input Torque [Nm]	50
Dynamic Load Ca [kN]	2.3
Weight	
Base 0 Travel [kg]	7.70
Per 100mm of Travel [kg]	0.32
Grease [kg]	0.22