Product Specification Sheet

GB210S-R2

Call 800-321-7800 or visit us online at www.nookindustries.com to configure and order your GB210S-R2 today!

2D/3D CAD ONLINE

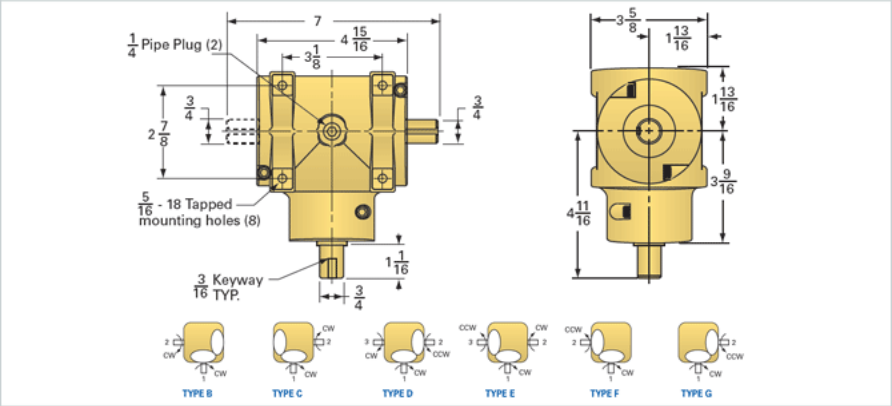

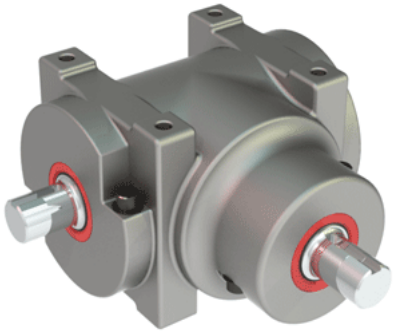

Product Info	
Product Code	GB210S-R2
Gear Ratio	2:1
Performance Specifications	
Rated Load RPM [rpm]	1700
Max HP for Continuous Duty [hp]	3.01
Max Torque for Continuous Duty [in-lb]	111.54
Max HP for Intermittent Duty [hp]	5.56
Max Torque for Intermittent Duty [in-lb]	206.31
Weight	
Nut Weight [lb]	6.25