Product Specification Sheet

ELZQ 80 h6

Call 800-321-7800 or visit us online at www.nookindustries.com to configure and order your ELZQ 80 h6 today!

2D/3D CAD ONLINE

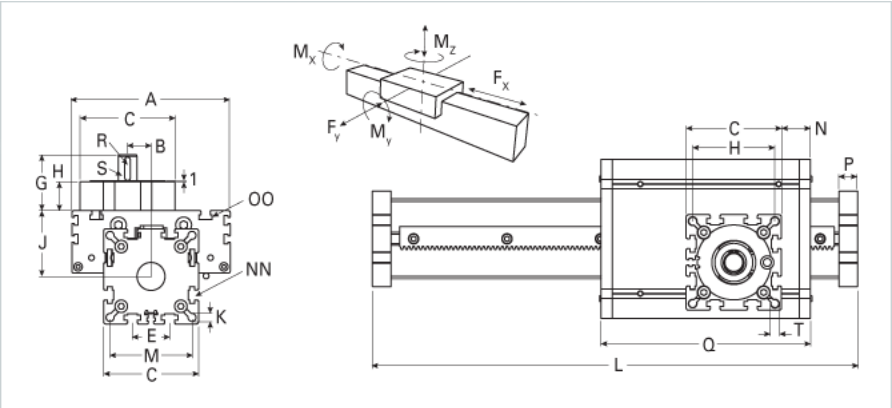

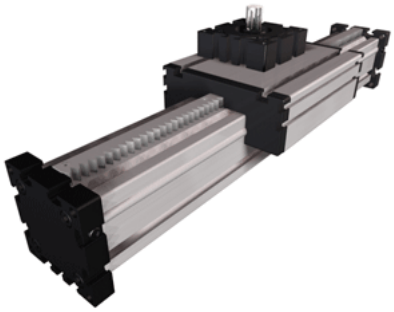

Details	
Size	80
Dimensions	
Basic Length L [mm]	260
A [mm]	170
B [mm]	25.5
C [mm]	102
D [mm]	80
E [mm]	40
G [mm]	60.5
H [mm]	31
J [mm]	70
K [mm]	8.8
M [mm]	88
N [mm]	25
NN	M10
OO	M10
P [mm]	20
Q [mm]	214
T	M10
Speed	
Speed Maximum [m/s]	4
Forces and Torques	
Fx dynamic [N]	1400
Fy dynamic [N]	2000
Fz dynamic [N]	1100
Mx dynamic [Nm]	55
My dynamic [Nm]	80
Mz dynamic [Nm]	120
Fx static [N]	1800
Fy static [N]	3000
Fz static [N]	1700
Mx static [Nm]	90
My static [Nm]	110
Mz static [Nm]	150
Geometrical moments of inertia of aluminum profile	
Elastic modulus [N/mm²]	70000
Ix [mm⁴]	1899000
Iy [mm⁴]	1897000
Weight	
Additional Weight per 100 mm [kg]	1.19
Basic Weight [kg]	11.0