Product Specification Sheet

RAD-5046-A3

Call 800-321-7800 or visit us online at www.nookindustries.com to configure and order your RAD-5046-A3 today!

2D/3D CAD ONLINE

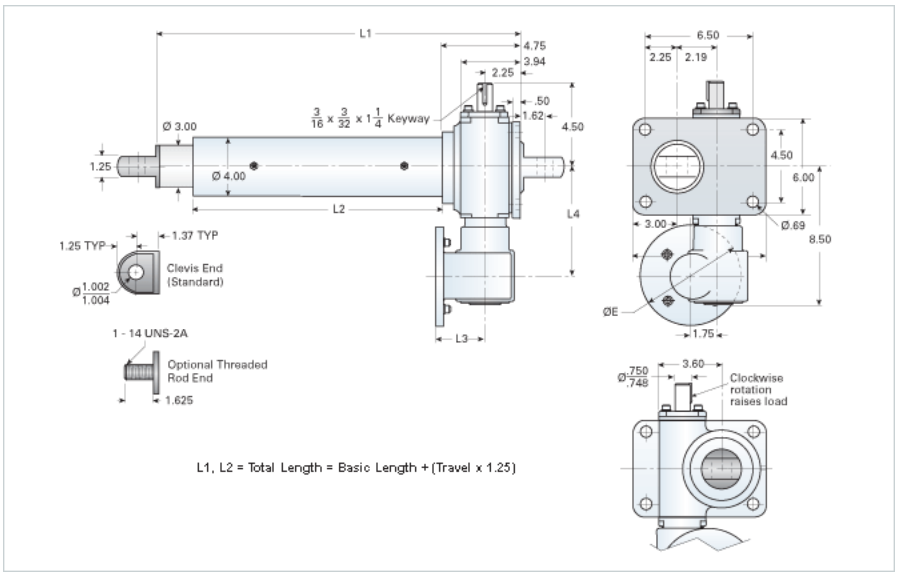

Details	
Gear Ratio Primary Reduction	24:1
Gear Ratio Secondary Reduction	6:1
Max Capacity [lb]	10000
Input Turns per Inch of Travel	384
Torque to Raise 1 lb. [in-lb]	0.0037
Acme Screw	1 1/2-2 2/3 RA
Screw Lead [in]	0.375
Root Diameter [in]	1.066
Max HP [hp]	1
Weight	
Basic Weight [lb]	66
Per Inch of Travel [lb]	1.87
Tube Dimensions	
L1 Basic Length [in]	12.38
L2 Basic Length [in]	6.06
NEMA 56C Dimensions	
L3 [in]	3.69
L4 [in]	5.63
E [in]	6.69
NEMA 180TC Dimensions	
L3 [in]	-
L4 [in]	-
F [in]	-