Product Specification Sheet

RAD-20048-HD

Call 800-321-7800 or visit us online at www.nookindustries.com to configure and order your RAD-20048-HD today!

2D/3D CAD ONLINE

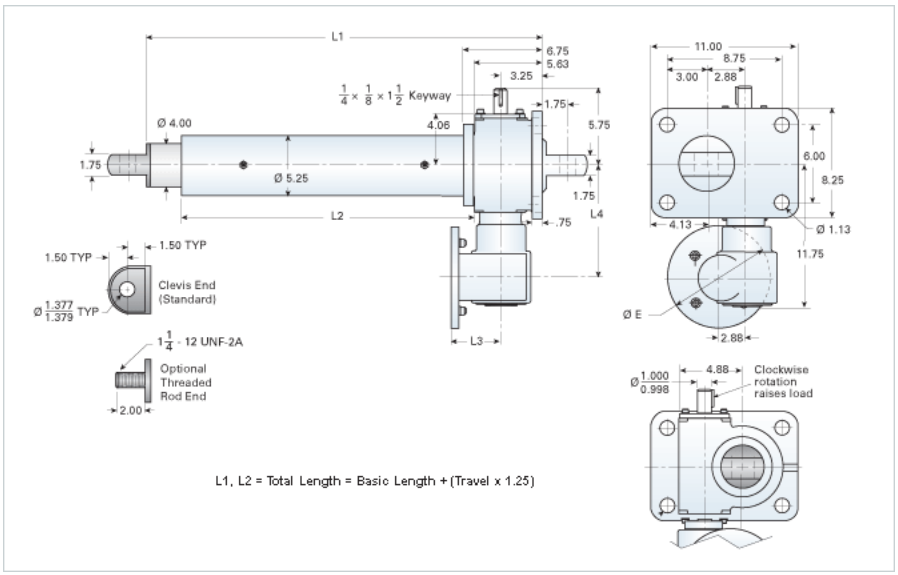

Details	
Gear Ratio Primary Reduction	24:1
Gear Ratio Secondary Reduction	8:1
Max Capacity [lb]	40000
Input Turns Per Inch Of Travel	384
Torque To Raise 1 lb. [in-lb]	0.0016
Ball Screw	2250-0500 SRT RA
Screw Lead [in]	0.500
Root Diameter [in]	1.850
Max HP [hp]	2
Weight	
Basic Weight [lb]	202
Per Inch of Travel [lb]	3.31
Tube Dimensions	
L1 Basic Length [in]	21.13
L2 Basic Length [in]	12.63
NEMA 56C Dimensions	
L3 [in]	-
L4 [in]	-
E [in]	-
NEMA 180TC Dimensions	
L3 [in]	6.12
L4 [in]	9.00
F [in]	9.12