Product Specification Sheet

RAD-5066-HL

Call 800-321-7800 or visit us online at www.nookindustries.com to configure and order your RAD-5066-HL today!

2D/3D CAD ONLINE

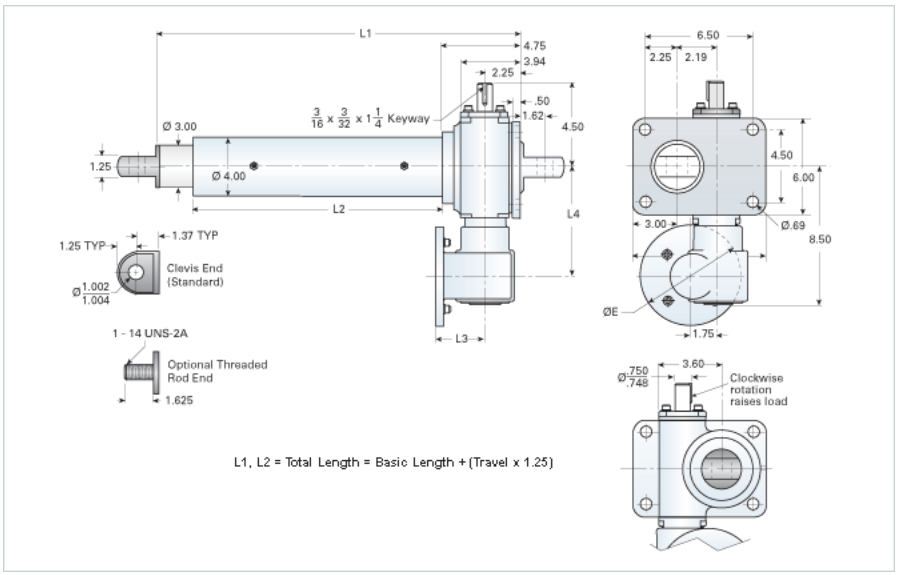

Details	
Gear Ratio Primary Reduction	6:1
Gear Ratio Secondary Reduction	6:1
Max Capacity [lb]	10000
Input Turns Per Inch Of Travel	36
Torque To Raise 1 lb. [in-lb]	0.0098
Ball Screw	1500-1000 SRT RA
Screw Lead [in]	1.000
Root Diameter [in]	1.140
Max HP [hp]	1
Weight	
Basic Weight [lb]	77
Per Inch of Travel [lb]	1.92
Tube Dimensions	
L1 Basic Length [in]	15.13
L2 Basic Length [in]	8.88
NEMA 56C Dimensions	
L3 [in]	3.69
L4 [in]	6.50
E [in]	6.69
NEMA 180TC Dimensions	
L3 [in]	-
L4 [in]	-
F [in]	-