Product Specification Sheet

DD-20024-A2/20XX

Call 800-321-7800 or visit us online at www.nookindustries.com to configure and order your DD-20024-A2/20XX today!

2D/3D CAD ONLINE

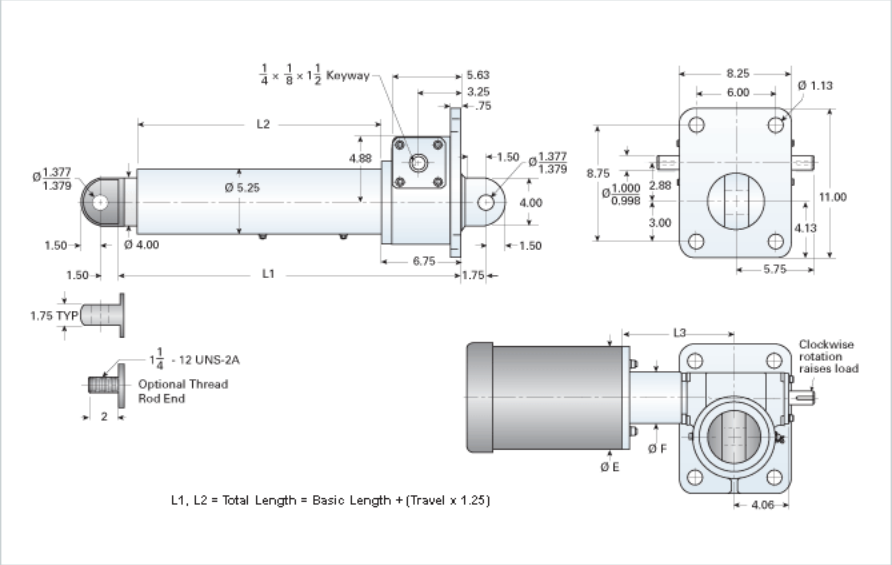

Performance Specifications	
Travel Rate [in/min]	36
Dynamic Capacity [lb]	3500
Motor Horse Power (ref.) [hp]	2
Std. Brake Torque [ft-lb]	10
Approximate Stopping Distance No Load [in]	0.05
Maximum Rod Reaction Torque [in-lb]	585
Details	
Gear Ratio	24:1
Input Turns Per Inch Of Travel	48
Torque To Raise 1 lb. [in-lb]	0.0218
Max Capacity [lb]	40000
Max HP [hp]	2.5
Weight	
Basic Weight [lb]	138
Per Inch of Travel [lb]	3.60
Tube Dimensions	
L1 Basic Length [in]	17.44
L2 Basic Length [in]	8.94
NEMA 42 Dimensions	
L3 [in]	-
E [in]	-
F [in]	-
NEMA 48 Dimensions	
L3 [in]	-
E [in]	-
F [in]	-
NEMA 56C Dimensions	
L3 [in]	8.65
E [in]	6.75
F [in]	5.18
NEMA 182TC Dimensions	
L3 [in]	-
E [in]	-
F [in]	-
NEMA 184TC Dimensions	
L3 [in]	-
E [in]	9.25
F [in]	5.19
NEMA 213TC Dimensions	
L3 [in]	9.00
E [in]	9.25
F [in]	5.69