Product Specification Sheet

DST 160 Dual Carriage Extended Carriage

Call 800-321-7800 or visit us online at www.nookindustries.com to configure and order your DST 160 Dual Carriage Extended Carriage today!

2D/3D CAD ONLINE

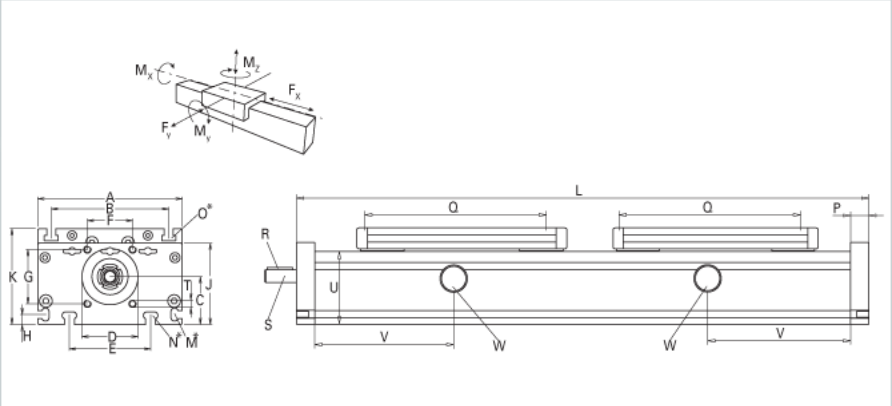

Details	
Size	160
Screw Options	24x5/24x10
Screw Type	Trapexoidal
Dimensions	
Basic Length L [mm]	560
A [mm]	160
B [mm]	130
C [mm]	53
D [mm]	62
E [mm]	90
F [mm]	50
G [mm]	60
H [mm]	11
J [mm]	90
K [mm]	106
M	M6
N	M8
O	M8
P [mm]	20
Q [mm]	230
Shaft R Key [mm]	5X5X28
Shaft S Diameter x Length [mm]	14 h6x35
T	M8
U [mm]	80
Forces and Torques	
Fx [N] 10000 km	4000
Fy [N] 10000 km	3900
Fz [N] 10000 km	5020
Mx [Nm] 10000 km	255
My [Nm] 10000 km	262
Mz [Nm] 10000 km	258
Fx [N] 5000 km	5000
Fy [N] 5000 km	5570
Fz [N] 5000 km	7050
Mx [Nm] 5000 km	358
My [Nm] 5000 km	369
Mz [Nm] 5000 km	364
No-load torque [Nm]	1
Geometrical moments of inertia of aluminum profile	
Elastic modulus [N/mm²]	70000
Ix [mm⁴]	21300000
Iy [mm⁴]	12300000
Weight	
Weight Per 100 mm [kg]	2.1
Basic Weight [kg]	7.2