Product Specification Sheet

DLK 160 Dual Carriage Extended Carriage

Call 800-321-7800 or visit us online at www.nookindustries.com to configure and order your DLK 160 Dual Carriage Extended Carriage today!

2D/3D CAD ONLINE

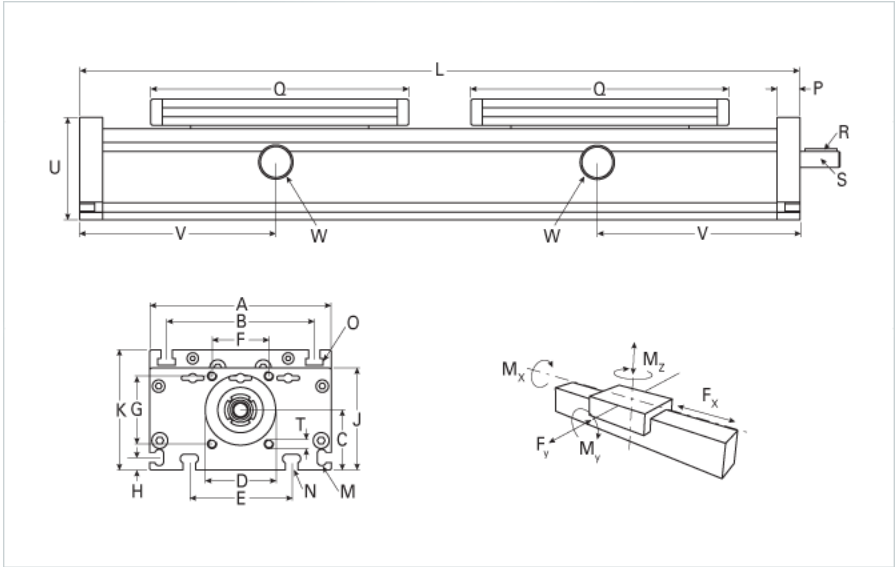

Details	
Size	160
Screw Options	25x5/20x20/25x10/25x25
Screw Type	Ball Screw
Dimensions	
Basic Length L [mm]	570
A [mm]	160
B [mm]	130
C [mm]	53
D [mm]	62
E [mm]	90
F [mm]	50
G [mm]	60
H [mm]	11
J [mm]	90
K [mm]	106
M	M6
N	M8
O	M8
P [mm]	20
Q [mm]	250
Shaft R Key [mm]	5x5x28
Shaft S Diameter x Length [mm]	14 h6x35
T	M8
U [mm]	80
Forces and Torques	
No Load Torque-Dynamic	0.9
Fx dynamic [N]	4000
Fy dynamic [N]	2000
Fz dynamic [N]	2800
Mx dynamic [Nm]	320
My dynamic [Nm]	300
Mz dynamic [Nm]	150
Fx static [N]	5000
Fy static [N]	3000
Fz static [N]	3500
Mx static [Nm]	400
My static [Nm]	360
Mz static [Nm]	180
Geometrical moments of inertia of aluminum profile	
Elastic modulus [N/mm²]	70000
Ix [mm⁴]	2220000
Iy [mm⁴]	12200000
Weight	
Additional Weight per 100 mm [kg]	1.96
Basic Weight [kg]	12.0