Product Specification Sheet

DLZ 120 Extended Carriage 6 Split Rollers

Call 800-321-7800 or visit us online at www.nookindustries.com to configure and order your DLZ 120 Extended Carriage 6 Split Rollers today!

2D/3D CAD ONLINE

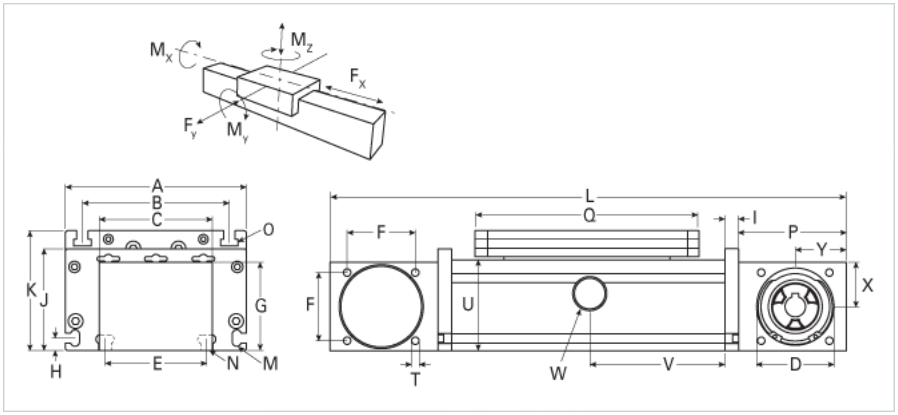

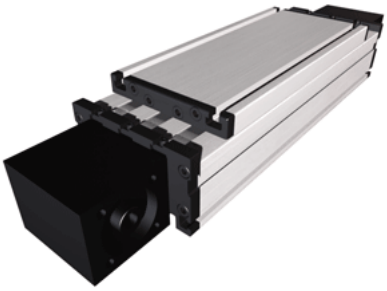

Details	
Size	120
Belt	5M20
mm/Rev	130
Number of Teeth	26
Dimensions	
Basic Length L [mm]	410
A [mm]	120
B [mm]	96
C [mm]	80
D [mm]	47
E [mm]	78
F [mm]	42
G [mm]	60
H [mm]	10
I [mm]	10
J [mm]	68
K [mm]	79
M	M5
N	M6
O	M6
P [mm]	70
Q [mm]	236
T	M6
U [mm]	60
X [mm]	30
Y [mm]	35
Speed	
Speed Maximum [m/s]	4
Forces and Torques	
No-load torque [Nm]	3.5
Tensile force 0.2 sec [N]	100
Tensile force permanent [N]	900
Fx dynamic [N]	800
Fy dynamic [N]	900
Fz dynamic [N]	1000
Mx dynamic [Nm]	125
My dynamic [Nm]	120
Mz dynamic [Nm]	90
Fx static [N]	894
Fy static [N]	1100
Fz static [N]	1250
Mx static [Nm]	150
My static [Nm]	140
Mz static [Nm]	100
Geometrical moments of inertia of aluminum profile	
Elastic modulus [N/mm²]	70000
Ix [mm⁴]	660000
Iy [mm⁴]	3860000
Weight	
Additional Weight per 100 mm [kg]	0.85
Basic Weight [kg]	5.1
Values for Calulating Inertias	
Pulley Material	Aluminum

Pulley Diameter [mm]	41.38
Effective Pulley Width [mm]	80
Belt Weight [kg/m]	0.123
Standard Carriage Weight [kg]	2.95
No-load torque (w/cover bands) [Nm]	1.6
No-load torque (w/o cover bands) [Nm]	1.2
Friction Coefficient	0.01