Product Specification Sheet

ELSD 80S WAC Wide Belt Extended Carriage

Call 800-321-7800 or visit us online at www.nookindustries.com to configure and order your ELSD 80S WAC Wide Belt Extended Carriage today!

2D/3D CAD ONLINE

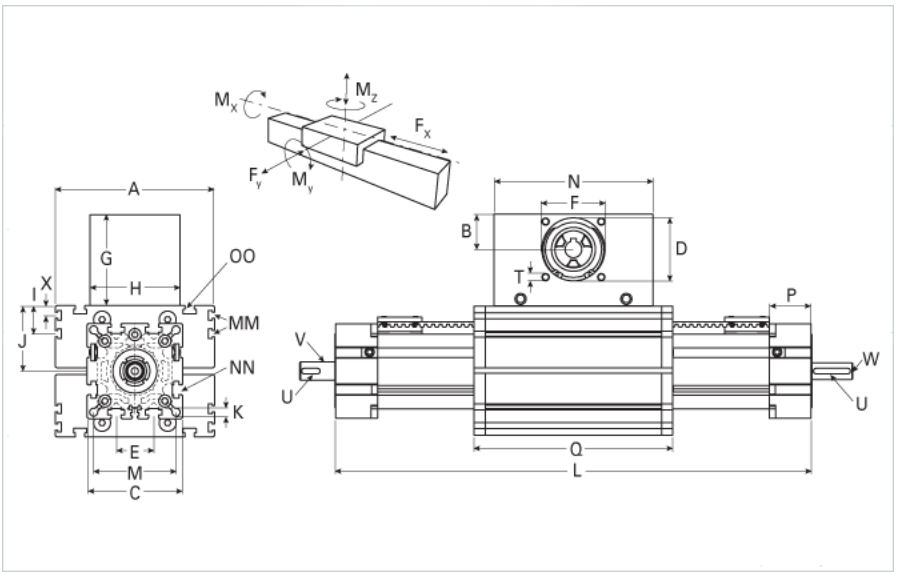

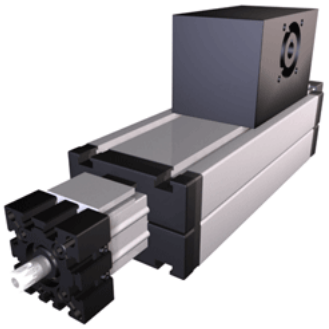

Details	
Size	80S
Belt	8M50
mm/Rev	256
Number of Teeth	32
Pully Diameter [mm]	81.5
Dimensions	
Basic Length L [mm]	655
A [mm]	190
B [mm]	60
C [mm]	102
D [mm]	90
E [mm]	40
F [mm]	80
G [mm]	140
H [mm]	130
I [mm]	30
J [mm]	71
K [mm]	8.5
M [mm]	88
MM	M6
N [mm]	270
OO	M10
P [mm]	45
Q [mm]	509
T	M10
X [mm]	12.5
V (Z Drive End) [mm]	18 x 30
U (Z Drive End) [mm]	6x6x20
V (Z Load End) [mm]	20 x 30
U (Z Load End) [mm]	6x6x20
W (Z Load End) [mm]	M10x20
Shaft Diameter and Length [mm]	18 x 45
Key	6x6x40
Speed	
Speed Maximum [m/s]	8
Forces and Torques	
No-load torque Stiction torque Mr [Nm]	0.1
No-load torque [Nm]	1.2
Tensile force 0.2 sec [N]	4300
Tensile force permanent [N]	4000
Fd [N]	250
Mr [Nm]	20
Fx dynamic [N]	3800
Fy dynamic [N]	3600
Fz dynamic [N]	1800
Mx dynamic [Nm]	140
My dynamic [Nm]	230

Mz dynamic [Nm]	220
Fx static [N]	4000
Fy static [N]	4600
Fz static [N]	3000
Mx static [Nm]	170
My static [Nm]	270
Mz static [Nm]	300
Geometrical moments of inertia of aluminum profile	
Elastic modulus [N/mm²]	70000
Ix [mm⁴]	1899000
Iy [mm⁴]	1897000
Weight	
Additional Weight per 100 mm [kg]	1.30
Basic Weight [kg]	15.2