Product Specification Sheet

ELSZ 60S WAC Wide Belt

Call 800-321-7800 or visit us online at www.nookindustries.com to configure and order your ELSZ 60S WAC Wide Belt today!

2D/3D CAD ONLINE

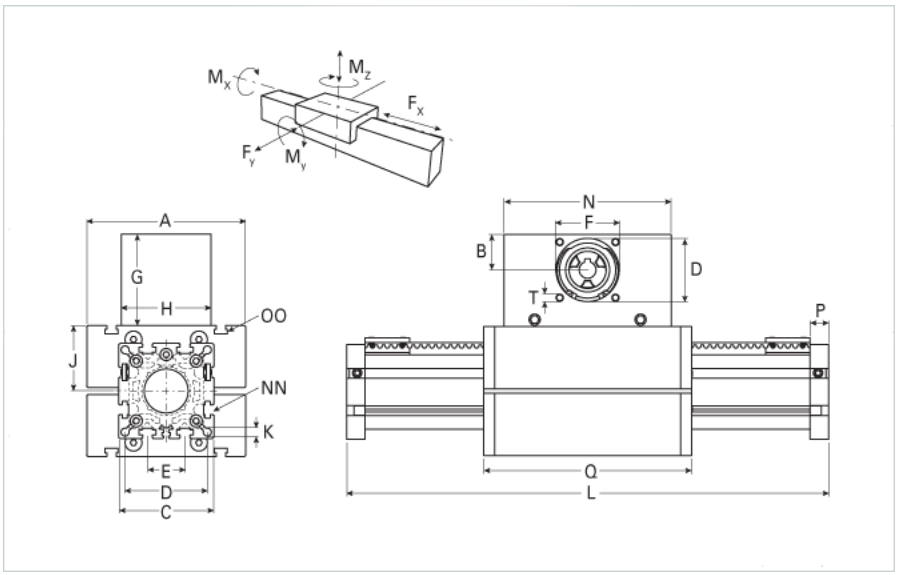

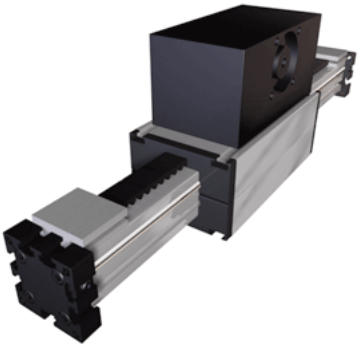

Details	
Size	60S
Belt	8M30
mm/Rev	192
Number of Teeth	24
Dimensions	
Basic Length L [mm]	375
A [mm]	170
B [mm]	34
C [mm]	82
D [mm]	68
E [mm]	30
F [mm]	60
G [mm]	105
H [mm]	100
I [mm]	-
J [mm]	53
K [mm]	8.5
MM	-
N [mm]	180
NN	M8
O [mm]	69
OO	M8
P [mm]	16
Q [mm]	214
T	M8
V [mm]	-
Shaft Diameter and Length [mm]	18 x 45
Key	6x6x40
Speed	
Speed Maximum [m/s]	5
Forces and Torques	
No-load torque [Nm]	0.9
Tensile force 0.2 sec [N]	290
Tensile force permanent [N]	1900
Fx dynamic [N]	1800
Fy dynamic [N]	3100
Fz dynamic [N]	1600
Mx dynamic [Nm]	65
My dynamic [Nm]	140
Mz dynamic [Nm]	170
Fx static [N]	1700
Fy static [N]	4100
Fz static [N]	2160
Mx static [Nm]	88
My static [Nm]	190
Mz static [Nm]	230
Geometrical moments of inertia of aluminum profile	

Elastic modulus [N/mm²]	70000
Ix [mm⁴]	679000
Iy [mm⁴]	697000
Weight	
Additional Weight per 100 mm [kg]	0.62
Basic Weight [kg]	7.3
Values for Calulating Inertias	
Pulley Material - Drive Pulley (x1)	Steel
Pulley Material - Idler Pulleys (x2)	Aluminum
Pulley Diameter [mm]	61.1
Effective Pulley Width [mm]	100
Belt Weight [kg/m]	0.123
Standard Carriage Weight [kg]	6.34
No-load torque [Nm]	0.9
Friction Coefficient	0.01