Product Specification Sheet

ELSZ 80S Wide Belt Extended Carriage

Call 800-321-7800 or visit us online at www.nookindustries.com to configure and order your ELSZ 80S Wide Belt Extended Carriage today!

2D/3D CAD ONLINE

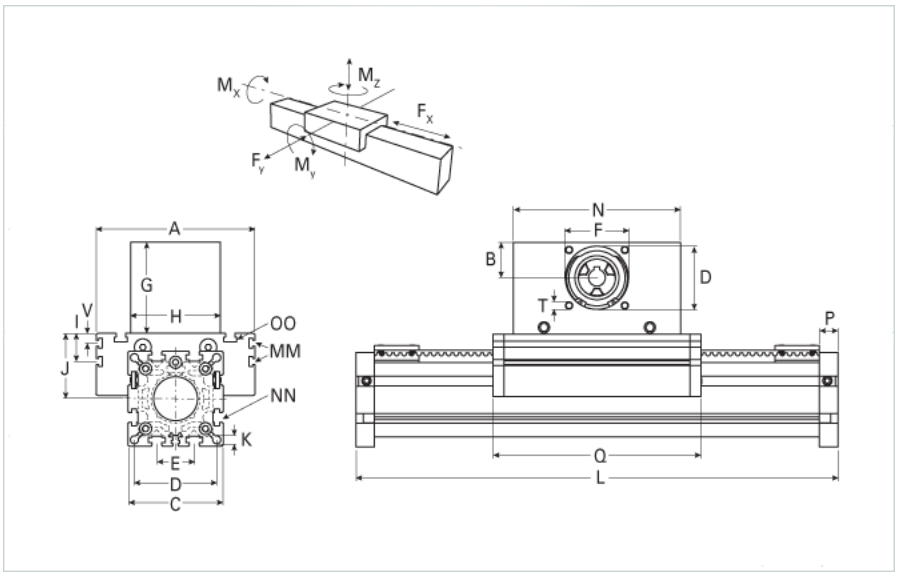

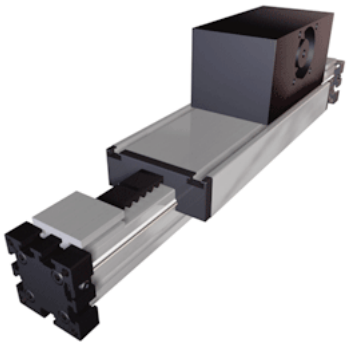

Details	
Size	80S
Belt	8M50
mm/Rev	256
Number of Teeth	32
Dimensions	
Basic Length L [mm]	645
A [mm]	190
B [mm]	60
C [mm]	102
D [mm]	90
E [mm]	40
F [mm]	80
G [mm]	139
H [mm]	130
I [mm]	30
J [mm]	71
K [mm]	8.5
MM	M6
N [mm]	270
NN	M8
O [mm]	88
OO	M8
P [mm]	20
Q [mm]	489
T	M10
V [mm]	12.5
Shaft Diameter and Length [mm]	22 x 45
Key	6x6x40
Speed	
Speed Maximum [m/s]	8
Forces and Torques	
No-load torque [Nm]	1.2
Tensile force 0.2 sec [N]	4300
Tensile force permanent [N]	4000
Fx dynamic [N]	3800
Fy dynamic [N]	3600
Fz dynamic [N]	1800
Mx dynamic [Nm]	140
My dynamic [Nm]	230
Mz dynamic [Nm]	220
Fx static [N]	4000
Fy static [N]	4600
Fz static [N]	3000
Mx static [Nm]	170
My static [Nm]	270
Mz static [Nm]	300
Geometrical moments of inertia of aluminum profile	

Elastic modulus [N/mm²]	70000
Ix [mm⁴]	1899000
Iy [mm⁴]	1897000
Weight	
Additional Weight per 100 mm [kg]	1.00
Basic Weight [kg]	15.0
Values for Calulating Inertias	
Pulley Material - Drive Pulley (x1)	Steel
Pulley Material - Idler Pulleys (x2)	Aluminum
Pulley Diameter [mm]	81.5
Effective Pulley Width [mm]	130
Belt Weight [kg/m]	0.256
Standard Carriage Weight [kg]	6.07
No-load torque [Nm]	1.2
Friction Coefficient	0.01