Product Specification Sheet

ELT 60 WAC Dual Carriage

Call 800-321-7800 or visit us online at www.nookindustries.com to configure and order your ELT 60 WAC Dual Carriage today!

2D/3D CAD ONLINE

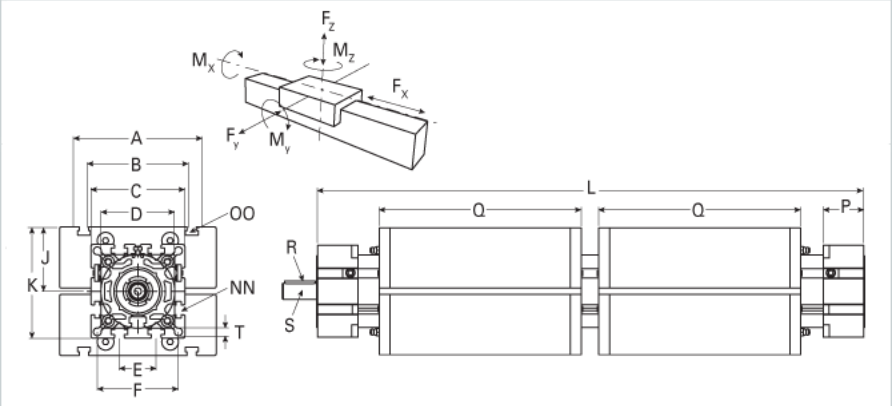

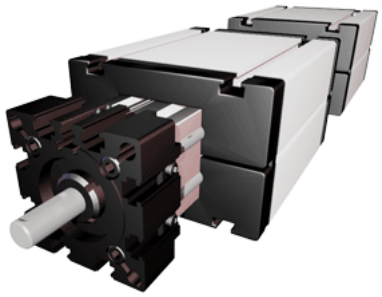

Details	
Size	60
Screw Options	24x5/24x10
Screw Type	Trapezoidal
Dimensions	
Basic Length L [mm]	442
A [mm]	144
B [mm]	96
C [mm]	82
D [mm]	62x1
E [mm]	30
F [mm]	69
G [mm]	-
H [mm]	-
J [mm]	49
K [mm]	90
MM	-
NN	M8
OO	M8
P [mm]	35
Q [mm]	184
R [mm]	5x5x28
S Diameter x Length [mm]	14 x 35
T-Diameter [mm]	8.5
Forces and Torques	
No-load torque [Nm	0.8
Fx dynamic [N]	2000
Fy dynamic [N]	2000
Fz dynamic [N]	1100
Mx dynamic [Nm]	43
My dynamic [Nm]	70
Mz dynamic [Nm]	100
Fx static [N]	2500
Fy static [N]	3000
Fz static [N]	1700
Mx static [Nm]	67
My static [Nm]	90
Mz static [Nm]	120
Geometrical moments of inertia of aluminum profile	
Elastic modulus [N/mm²]	70000
Ix [mm⁴]	679000
Iy [mm⁴]	697000
Weight	
Additional Weight per 100 mm [kg]	0.89
Basic Weight [kg]	8.1