Product Specification Sheet

ELZZ 80S WAC

Call 800-321-7800 or visit us online at www.nookindustries.com to configure and order your ELZZ 80S WAC today!

2D/3D CAD ONLINE

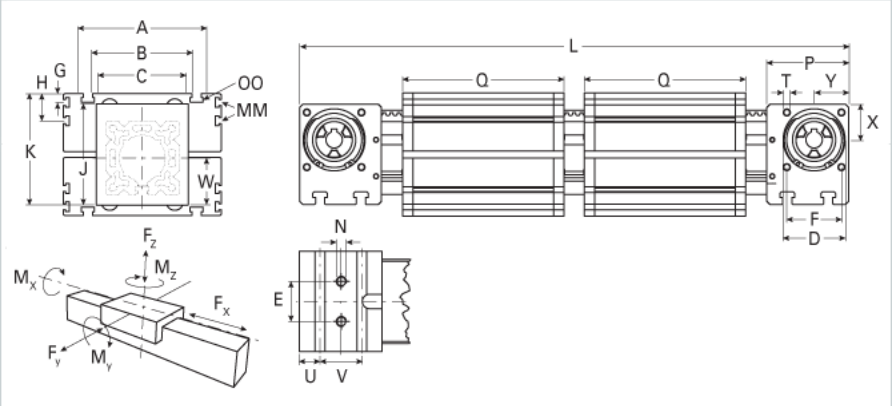

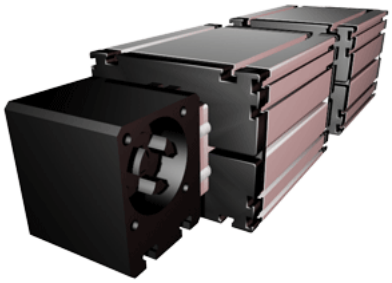

Details	
Size	80S
Belt	8M12
mm/Rev	192
Number of Teeth	32
Dimensions	
Basic Length L [mm]	650
A [mm]	190
B [mm]	126
C [mm]	100
D [mm]	68
E [mm]	40
F [mm]	60
G [mm]	12.5
H [mm]	30
J [mm]	110
K [mm]	122
MM	M6
N	M10
OO	M8
P [mm]	90
Q [mm]	234
T	M8
U [mm]	22.5
V [mm]	45
W [mm]	51
X [mm]	39
Y [mm]	38
Speed	
Speed Maximum [m/s]	8
Forces and Torques	
No-load torque [Nm]	1.2
Tensile force 0.2 sec [N]	746
Tensile force permanent [N]	679
Fx dynamic [N]	500
Fy dynamic [N]	3600
Fz dynamic [N]	2600
Mx dynamic [Nm]	140
My dynamic [Nm]	230
Mz dynamic [Nm]	220
Fx static [N]	679
Fy static [N]	4600
Fz static [N]	3000
Mx static [Nm]	170
My static [Nm]	270
Mz static [Nm]	300
Geometrical moments of inertia of aluminum profile	
Elastic modulus [N/mm²]	70000
Ix [mm⁴]	1899000
Iy [mm⁴]	1897000
Weight	
Additional Weight per 100 mm [kg]	1.00
Basic Weight [kg]	14.8
Values for Calulating Inertias	

Pulley Material	Steel
Pulley Diameter [mm]	61.12
Effective Pulley Width [mm]	100.0
Belt Weight [kg/m]	0.256
Standard Carriage Weight [kg]	7.04
No-load torque [Nm]	1.2
Friction Coefficient	0.01