Product Specification Sheet

ELRZ 100 WAC

Call 800-321-7800 or visit us online at www.nookindustries.com to configure and order your ELRZ 100 WAC today!

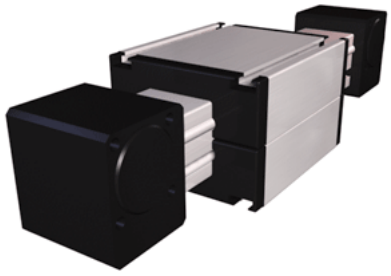

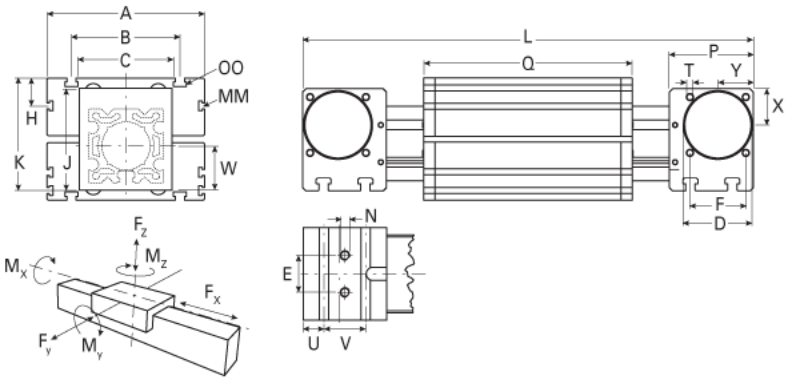

Details	
Size	100
Dimensions	
Basic Length L [mm]	546
A [mm]	230
B [mm]	155
C [mm]	130
D [mm]	90
E [mm]	50
F [mm]	80
G [mm]	-
H [mm]	29
J [mm]	135
K [mm]	154
MM	M10
N	M12
OO	M10
P [mm]	110
Q [mm]	316
T-Diameter	M10
U [mm]	23
V [mm]	64
W [mm]	65
X [mm]	50
Y [mm]	50
Forces and Torques	
Fx dynamic [N]	-
Fy dynamic [N]	6500
Fz dynamic [N]	2200
Mx dynamic [Nm]	230
My dynamic [Nm]	270
Mz dynamic [Nm]	500
Fx static [N]	-
Fy static [N]	8000
Fz static [N]	3600
Mx static [Nm]	300
My static [Nm]	400
Mz static [Nm]	750
Geometrical moments of inertia of aluminum profile	
Elastic modulus [N/mm²]	70000
Ix [mm⁴]	4440000
Iy [mm⁴]	4480000
Weight	
Additional Weight per 100 mm [kg]	1.50
Basic Weight [kg] [.0}	17.5