Product Specification Sheet

ELT 80 WAC

Call 800-321-7800 or visit us online at www.nookindustries.com to configure and order your ELT 80 WAC today!

2D/3D CAD ONLINE

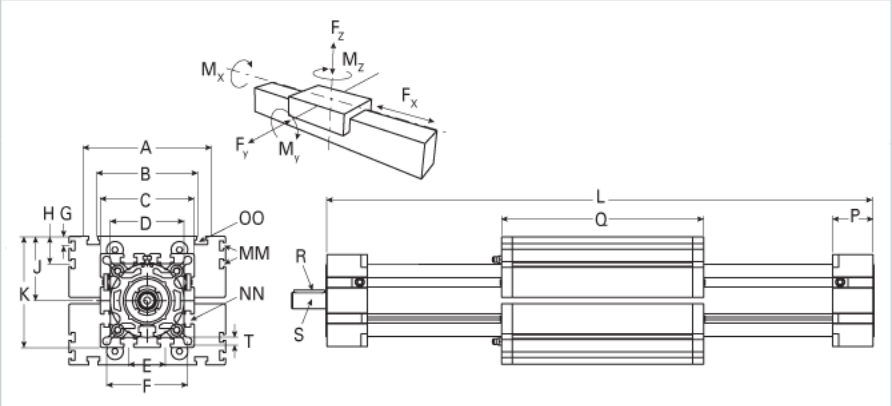

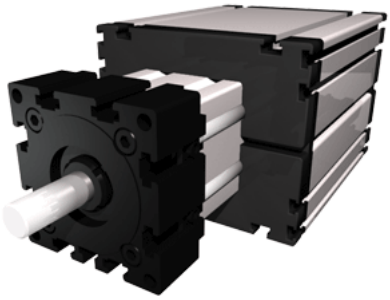

Details	
Size	80
Screw Options	28x5/28x10
Screw Type	Trapezoidal
Dimensions	
Basic Length L [mm]	301
A [mm]	170
B [mm]	117
C [mm]	102
D [mm]	80x1
E [mm]	40
F [mm]	88
G [mm]	10
H [mm]	30
J [mm]	70
K [mm]	121
MM	M6
NN	M10
OO	M10
P [mm]	45
Q [mm]	210
R [mm]	6x6x40
S Diameter x Length [mm]	18x45
T-Diameter [mm]	8.5
Forces and Torques	
No-load torque [Nm	0.8
Fx dynamic [N]	4000
Fy dynamic [N]	2000
Fz dynamic [N]	1100
Mx dynamic [Nm]	55
My dynamic [Nm]	80
Mz dynamic [Nm]	120
Fx static [N]	5000
Fy static [N]	3000
Fz static [N]	1700
Mx static [Nm]	90
My static [Nm]	110
Mz static [Nm]	150
Geometrical moments of inertia of aluminum profile	
Elastic modulus [N/mm²]	70000
Ix [mm⁴]	1899000
Iy [mm⁴]	1897000
Weight	
Additional Weight per 100 mm [kg]	1.48
Basic Weight [kg]	10.0