Product Specification Sheet

DST 120

Call 800-321-7800 or visit us online at www.nookindustries.com to configure and order your DST 120 today!

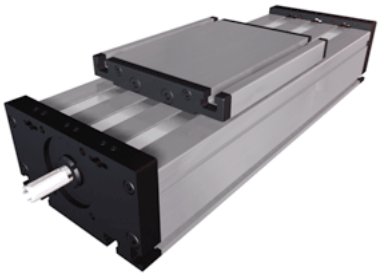

2D/3D CAD ONLINE

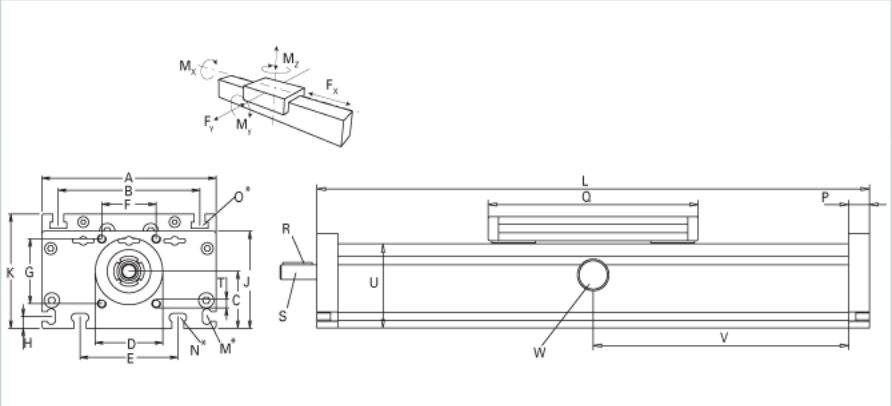

Details	
Size	120
Screw Options	18x4/18x8
Screw Type	Trapexoidal
Dimensions	
Basic Length L [mm]	200
A [mm]	120
B [mm]	96
C [mm]	39
D [mm]	47
E [mm]	78
F [mm]	42
G [mm]	42
H [mm]	10
J [mm]	68
K [mm]	79
M	M5
N	M6
O	M6
P [mm]	15
Q [mm]	156
Shaft R Key [mm]	3x3x25
Shaft S Diameter x Length [mm]	10 h6x27
T	M6
U [mm]	60
Forces and Torques	
Fx [N] 10000 km	800
Fy [N] 10000 km	1405
Fz [N] 10000 km	1650
Mx [Nm] 10000 km	64
My [Nm] 10000 km	77
Mz [Nm] 10000 km	76
Fx [N] 5000 km	900
Fy [N] 5000 km	1776
Fz [N] 5000 km	2090
Mx [Nm] 5000 km	81
My [Nm] 5000 km	97
Mz [Nm] 5000 km	96
No-load torque [Nm]	1.1
Geometrical moments of inertia of aluminum profile	
Elastic modulus [N/mm²]	70000
Ix [mm⁴]	561000
Iy [mm⁴]	3419000
Weight	
Weight Per 100 mm [kg]	0.9
Basic Weight [kg]	3.9