Product Specification Sheet

NH30EA Assembly

Call 800-321-7800 or visit us online at www.nookindustries.com to configure and order your NH30EA Assembly today!

2D/3D CAD ONLINE

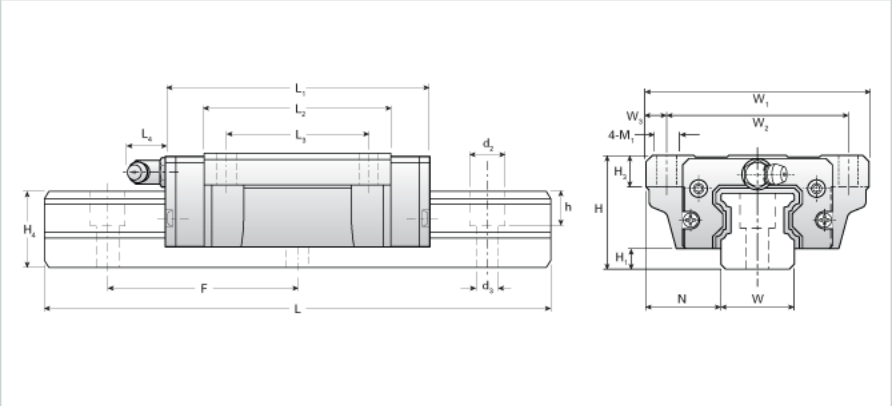

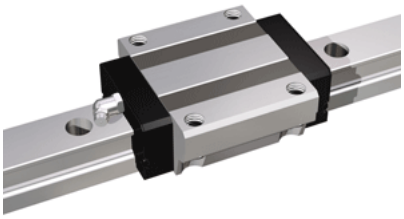

Dimensions	
H [mm]	42
H1 [mm]	7
N [mm]	28.0
Metric Profile Rail	
(Rail)Details	
Size [mm]	30
Type	Standard
(Rail)Dimensions	
d2 [mm]	14
d3 [mm]	9
h [mm]	14
H4 [mm]	28
F [mm]	80
W [mm]	28
Maximum Length [mm]	4000
(Rail)Weight	
Weights-Rail [kg/m]	5.3
Metric Runner Block, Heavy Load, Flange Type, 4 Tapped Holes	
(Runner Block)Details	
Size [mm]	30
(Runner Block)Dimensions	
L1 [mm]	97
L2 [mm]	68
L3 [mm]	52
L4 [mm]	12
H3 [mm]	13
W1 [mm]	90
W2 [mm]	72
W3 [mm]	9
M1	M10
(Runner Block)Forces and Torques	
Basic Load Ratings C [kN]	28.24
Basic Load Ratings C [lbf]	6347
Basic Load Ratings C0 [kN]	46.87
Basic Load Ratings C0 [lbf]	10535
Static Moment Ratings-Ma [kN-m]	0.43
Static Moment Ratings-Ma [lb-in]	3819
Static Moment Ratings-Mb [kN-m]	0.43
Static Moment Ratings-Mb [lb-in]	3819
Static Moment Ratings-Mc [kN-m]	0.72
Static Moment Ratings-Mc [lb-in]	6336
(Runner Block)Weight	
Weight-Block [kg]	1.80
(Runner Block)Grease Fitting	
Grease Fitting Part Number	B-M6F