Product Specification Sheet

# EZZE-MOUNT EZM-3010-23

Call 800-321-7800 or visit us online at www.nookindustries.com to configure and order your EZZE-MOUNT EZM-3010-23 today!

2D/3D CAD ONLINE

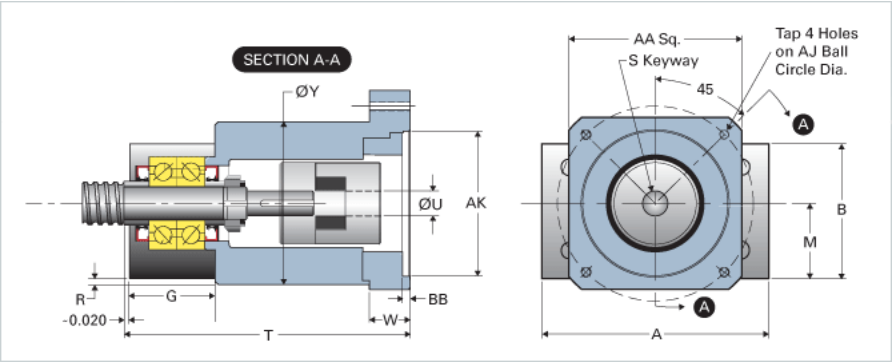

| | |
|---|---|
| **Product Info** | |
| Part Number | EZM-3010-23 |
| Reference Code | U2 |
| Machined End Code | 10 |
| Nema Frame Reference | 23 |
| Nominal Bearing Journal Size [mm] | 10 |
| **Dimensions** | |
| A [in] | 2.75 |
| AA [in] | 2.50 |
| AJ [in] | 2.625 |
| AK Maximum [in] | 1.506 |
| AK Minimum [in] | 1.503 |
| B [in] | 2.00 |
| BB [in] | 0.19 |
| [in] | 2.00 |
| D [in] | 2.50 |
| E [in] | 1.38 |
| F [in] | 0.31 |
| G [in] | 1.19 |
| H [in] | 0.56 |
| J [in] | 0.69 |
| K Shaft Diameter Maximum [in] | 0.312 |
| K Shaft Diameter Minimum [in] | 0.311 |
| L Holes [Number of Holes] | 4 |
| L Thru [in] | 0.028 |
| M [in] | 1.000 |
| N | - |
| Q [in] | 0.38 |
| R [in] | 0.26 |
| S [in] | 0.125 |
| T [in] | 4.10 |
| U [in] | 0.38 |
| W [in] | 0.38 |
| Y [in] | 2.50 |
| P - Bolt Count | 2 |
| P - Bolt Size | 5/16 x 2 |
| P - C'Bore [in] | 0.50 |
| P - P1 [in] | 0.56 |
| P - Thru [in] | 0.34 |
| TAP | #10-32 |