Product Specification Sheet

ActionJac 20SS-MSJ-UR 8:1

Call 800-321-7800 or visit us online at www.nookindustries.com to configure and order your ActionJac 20SS-MSJ-UR 8:1 today!

2D/3D CAD ONLINE

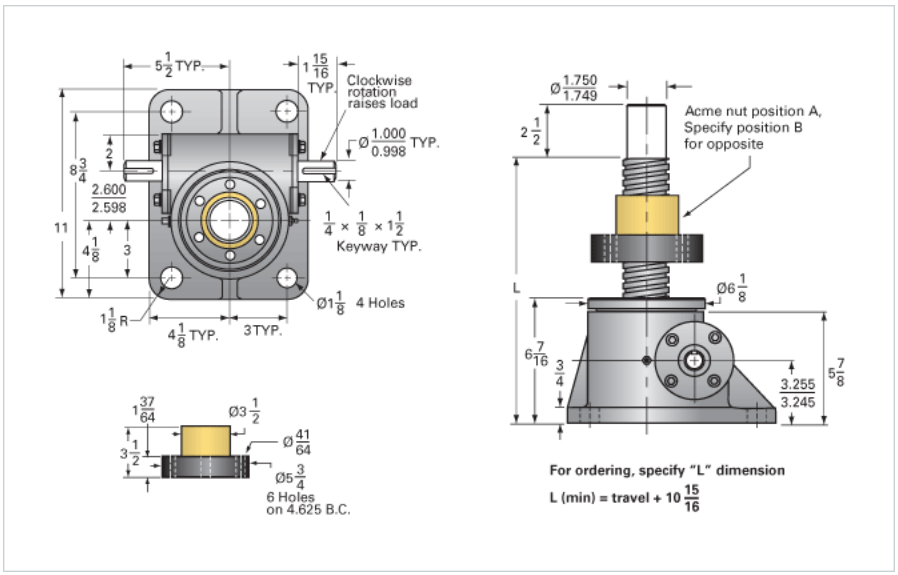

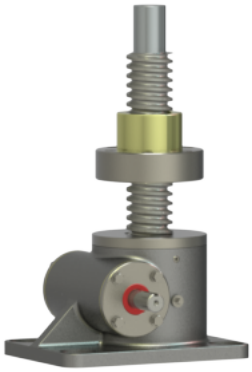

Details	
Capacity [Ton]	6.66
Gear Ratio	8:1
Turns of Worm per Inch Travel	16
Torque to Raise 1 lb. [in-lb]	0.0435
Lifting Screw Diameter [in]	2.50
Screw Lead [in]	0.500
Root Diameter [in]	1.908
Tare Drag Torque [in-lb]	40
Performance Specifications	
Maximum Allowable Input [hp]	5.00
Maximum Input Torque [in-lb]	580
Maximum Load at 1750 RPM	4140
Starting Torque	2 x Running Torque
Weight	
Base 0 Travel [lb]	85
Per Inch of Travel [lb]	2.00
Grease [lb]	2.3