Product Specification Sheet

ActionJac EM10-MSJ-U 8:1

Call 800-321-7800 or visit us online at www.nookindustries.com to configure and order your ActionJac EM10-MSJ-U 8:1 today!

2D/3D CAD ONLINE

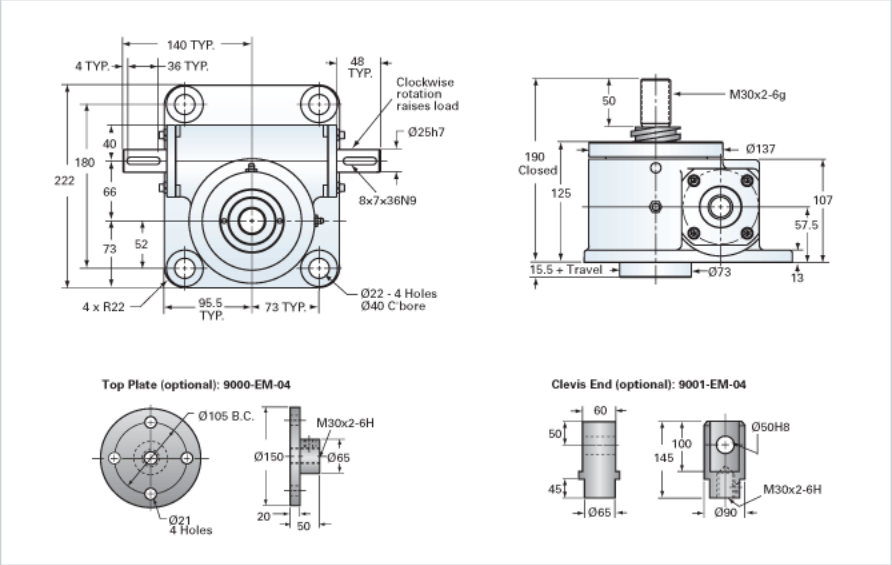

Details	
Capacity [kN]	100
Gear Ratio	8:1
Raise for One Turn of Worm [mm]	1.50
Torque to Raise 1 kN [Nm]	0.97
No Load Torque [Nm]	2.26
Lifting Screw Diameter [mm]	55
Screw Lead [mm]	12
Root Diameter [mm]	40.0
Performance Specifications	
Maximum Allowable Input [kW]	3.65
Maximum Input Torque [Nm]	97.20
Maximum Load at 1425 RPM [kN]	25.2
Maximum Worm Speed at Rated Load [rpm]	360
Starting Torque	2 x Running Torque
Weight	
Base 0 Travel [kg]	20.40
Per 100mm of Travel [kg]	1.46
Grease [kg]	0.68