Product Specification Sheet

ActionJac 15-MSJ-IR 8:1

Call 800-321-7800 or visit us online at www.nookindustries.com to configure and order your ActionJac 15-MSJ-IR 8:1 today!

2D/3D CAD ONLINE

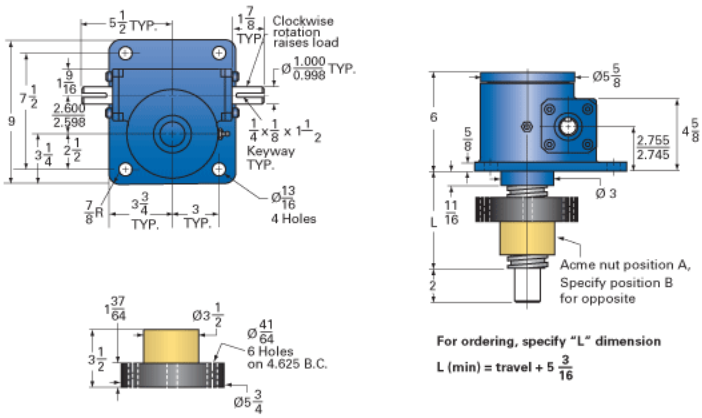

Details	
Capacity [Ton]	15
Gear Ratio	8:1
Turns of Worm per Inch Travel	16
Torque to Raise 1 lb. [in-lb]	0.0407
Lifting Screw Diameter [in]	2.25
Screw Lead [in]	0.500
Root Diameter [in]	1.684
Tare Drag Torque [in-lb]	20
Performance Specifications	
Maximum Allowable Input [hp]	5.00
Maximum Input Torque [in-lb]	1221
Maximum Worm Speed at Rated Load [rpm]	258
Maximum Load at 1750 RPM [lb]	4424
Starting Torque	2 x Running Torque
Weight	
Base 0 Travel [lb]	55
Per Inch of Travel [lb]	1.40
Grease [lb]	1.5