Product Specification Sheet

ActionJac 10-MSJ-IK 8:1

Call 800-321-7800 or visit us online at www.nookindustries.com to configure and order your ActionJac 10-MSJ-IK 8:1 today!

2D/3D CAD ONLINE

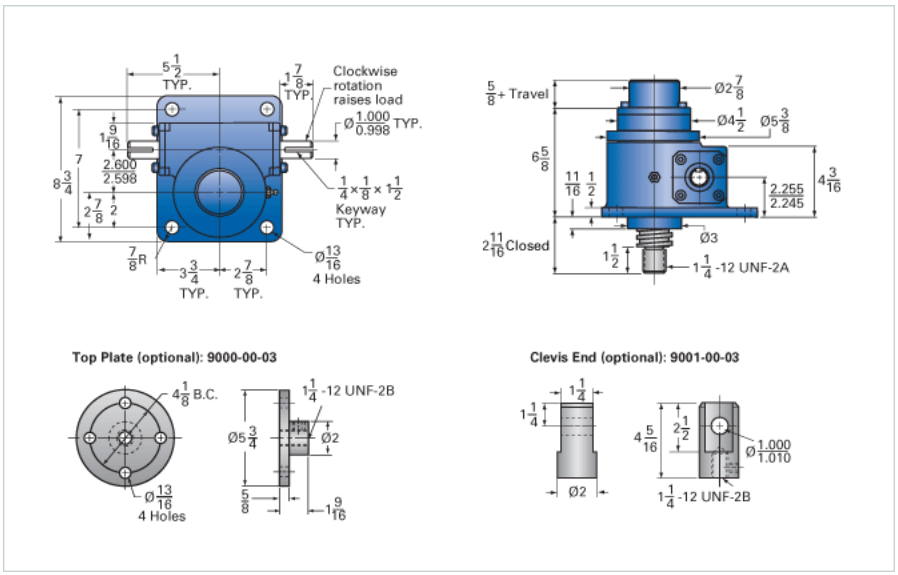

Details	
Capacity [Ton]	10
Gear Ratio	8:1
Turns of Worm per Inch Travel	16
Torque to Raise 1 lb. [in-lb]	0.0434
Lifting Screw Diameter [in]	2.00
Screw Lead [in]	0.500
Root Diameter [in]	1.410
Tare Drag Torque [in-lb]	20
Performance Specifications	
Maximum Allowable Input [hp]	5.00
Maximum Input Torque [in-lb]	753
Maximum Worm Speed at Rated Load [rpm]	363
Maximum Load at 1750 RPM [lb]	4149
Starting Torque	2 x Running Torque
Weight	
Base 0 Travel [lb]	45
Per Inch of Travel [lb]	1.20
Grease [lb]	1.5