Product Specification Sheet

ActionJac 0.5-BSJ-UK 5:1

Call 800-321-7800 or visit us online at www.nookindustries.com to configure and order your ActionJac 0.5-BSJ-UK 5:1 today!

2D/3D CAD ONLINE

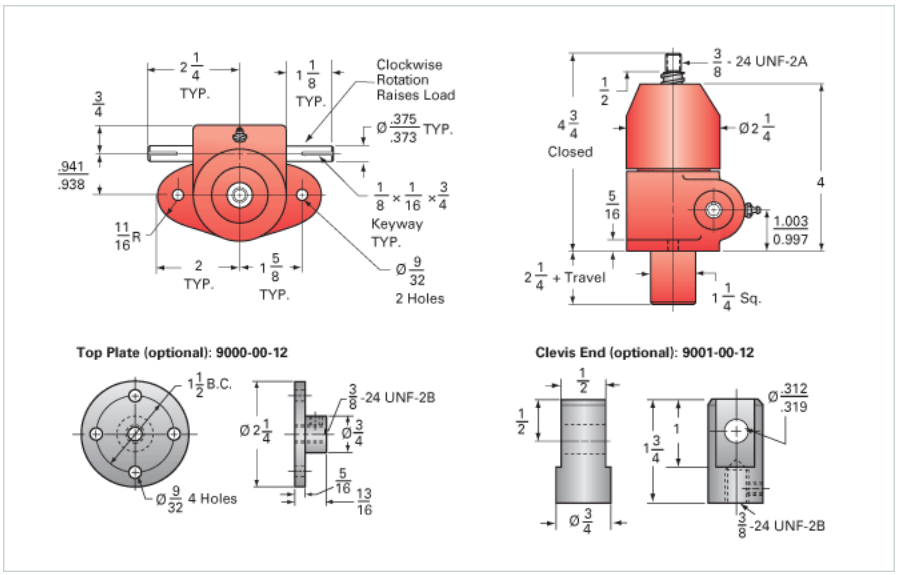

Details	
Capacity [Ton]	0.5
Gear Ratio	5:1
Turns of Worm per Inch Travel	25
Torque to Raise 1 lb. [in-lb]	0.0105
Lifting Screw Diameter [in]	0.63
Screw Lead [in]	0.200
Root Diameter [in]	0.500
BackDrive Holding Torque [ft-lb]	1
Tare Drag Torque [in-lb]	1
Performance Specifications	
Maximum Allowable Input [hp]	0.33
Maximum Input Torque [in-lb]	9.5
Maximum Worm Speed at Rated Load [rpm]	1800
Maximum Load at 1750 RPM [lb]	1000
Starting Torque	1.5 x Running Torque
Weight	
Base 0 Travel [lb]	3
Per Inch of Travel [lb]	0.03
Grease [lb]	0.6