Product Specification Sheet

ActionJac 2R-BSJ-IR 24:1

Call 800-321-7800 or visit us online at www.nookindustries.com to configure and order your ActionJac 2R-BSJ-IR 24:1 today!

2D/3D CAD ONLINE

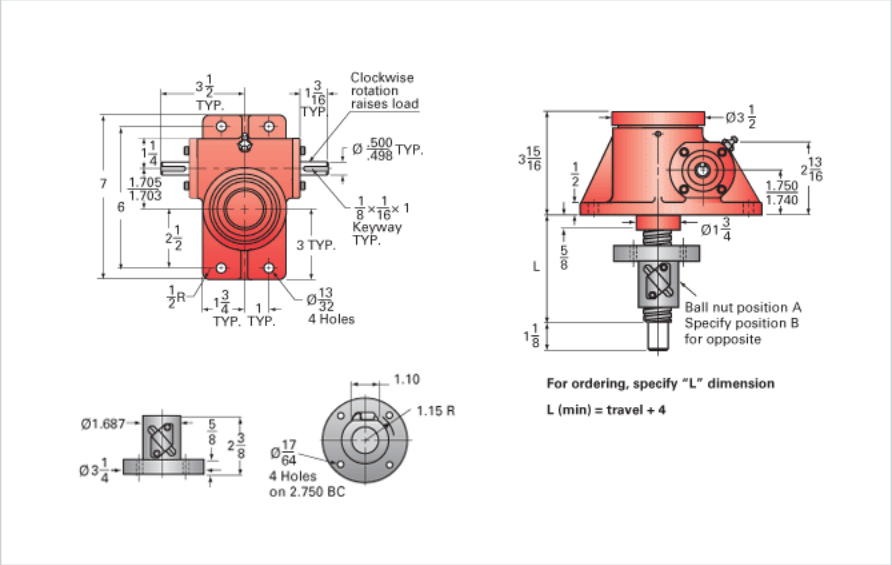

Details	
Capacity [Ton]	2
Gear Ratio	24:1
Turns of Worm per Inch Travel	96
Torque to Raise 1 lb. [in-lb]	0.0043
Lifting Screw Diameter [in]	1.00
Screw Lead [in]	0.250
Root Diameter [in]	0.820
BackDrive Holding Torque [ft-lb]	1.0
Tare Drag Torque [in-lb]	4
Performance Specifications	
Maximum Allowable Input [hp]	0.50
Maximum Input Torque [in-lb]	17
Maximum Worm Speed at Rated Load [rpm]	1800
Maximum Load at 1750 RPM [lb]	4000
Starting Torque	1.5 x Running Torque
Weight	
Base 0 Travel [lb]	18
Per Inch of Travel [lb]	0.60
Grease [lb]	0.5