Product Specification Sheet

ActionJac 10HL-BSJ-DC 8:1

Call 800-321-7800 or visit us online at www.nookindustries.com to configure and order your ActionJac 10HL-BSJ-DC 8:1 today!

2D/3D CAD ONLINE

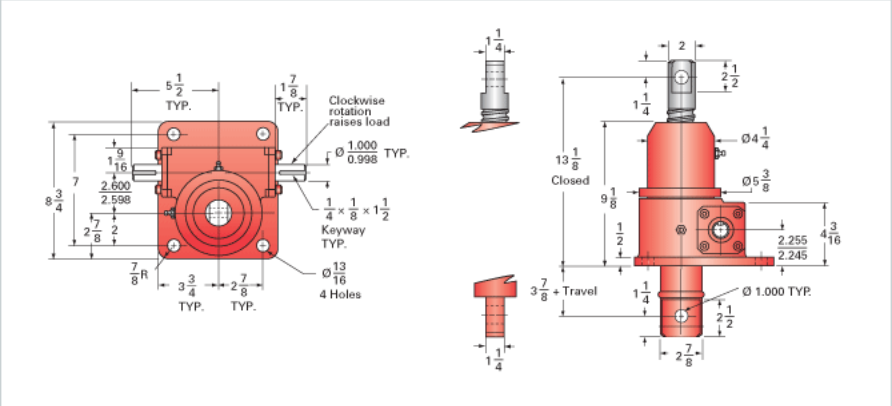

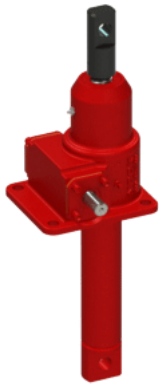

Details	
Capacity [Ton]	10
Gear Ratio	8:1
Turns of Worm per Inch Travel	8
Torque to Raise 1 lb. [in-lb]	0.0319
Torque to Raise 1 lb. Keyed [in-lb]	0.0351
Lifting Screw Diameter [in]	1.50
Screw Lead [in]	1.000
Root Diameter [in]	1.140
BackDrive Holding Torque [ft-lb]	26.0
Tare Drag Torque [in-lb]	20
Performance Specifications	
Maximum Allowable Input [hp]	5.00
Maximum Input Torque [in-lb]	638
Maximum Worm Speed at Rated Load Non-keyed [rpm]	494
Maximum Worm Speed at Rated Load Keyed [rpm]	449
Maximum Load at 1750 RPM Non-keyed [lb]	5645
Maximum Load at 1750 RPM Keyed [lb]	5132
Starting Torque	1.5 x Running Torque
Weight	
Base 0 Travel [lb]	50
Per Inch of Travel [lb]	0.80
Grease [lb]	1.5