Product Specification Sheet

RAD-2546-A4/03XX

Call 800-321-7800 or visit us online at www.nookindustries.com to configure and order your RAD-2546-A4/03XX today!

2D/3D CAD ONLINE

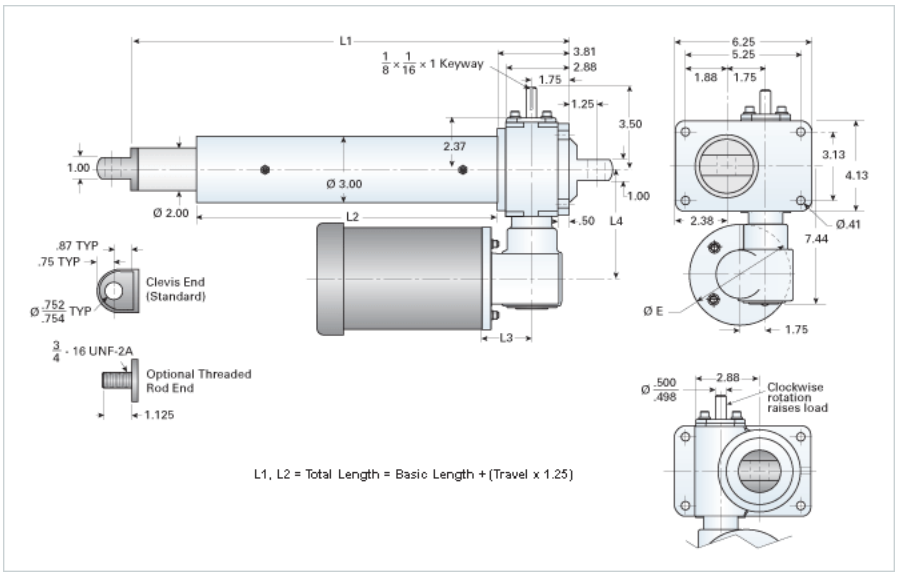

Performance Specifications	
Travel Rate [in/min]	3
Dynamic Capacity [lb]	5000
Motor Horse Power	0.33
Maximum Rod Reaction Torque [in-lb]	525
Std. Brake Torque [ft-lb]	3
Approximate Stopping Distance No Load [in]	0.004
Details	
Gear Ratio Primary Reduction	24:1
Gear Ratio Secondary Reduction	6:1
Input Turns per Inch of Travel	576
Torque to Raise 1 lb. [in-lb]	0.0027
Max Capacity [lb]	5000
Max HP [hp]	0.33
Weight	
Basic Weight [lb]	44
Per Inch of Travel [lb]	1.00
Tube Dimensions	
L1 Basic Length [in]	10.38
L2 Basic Length [in]	4.75
NEMA 56C Dimensions	
L3 [in]	3.69
L4 [in]	5.63
E [in]	6.69
NEMA 180TC Dimensions	
L3 [in]	-
L4 [in]	-
F [in]	-