Product Specification Sheet

# DST 120 Extended Carriage

Call 800-321-7800 or visit us online at www.nookindustries.com to configure and order your DST 120 Extended Carriage today!

2D/3D CAD ONLINE

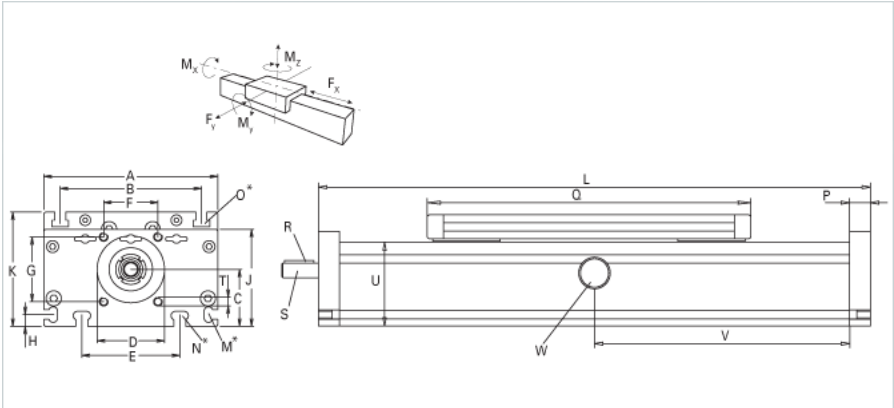


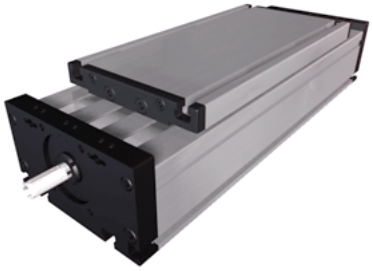

| | |
|---|---|
| **Details** | |
| Size | 120 |
| Screw Options | 18x4/18x8 |
| Screw Type | Trapexoidal |
| **Dimensions** | |
| Basic Length L [mm] | 200 |
| A [mm] | 120 |
| B [mm] | 96 |
| C [mm] | 39 |
| D [mm] | 47 |
| E [mm] | 78 |
| F [mm] | 42 |
| G [mm] | 42 |
| H [mm] | 10 |
| J [mm] | 68 |
| K [mm] | 79 |
| M | M5 |
| N | M6 |
| O | M6 |
| P [mm] | 15 |
| Q [mm] | 156 |
| Shaft R Key [mm] | 3x3x25 |
| Shaft S Diameter x Length [mm] | 10 h6x27 |
| T | M6 |
| U [mm] | 60 |
| **Forces and Torques** | |
| Fx [N] 10000 km | 800 |
| Fy [N] 10000 km | 1405 |
| Fz [N] 10000 km | 1650 |
| Mx [Nm] 10000 km | 64 |
| My [Nm] 10000 km | 77 |
| Mz [Nm] 10000 km | 76 |
| Fx [N] 5000 km | 900 |
| Fy [N] 5000 km | 1776 |
| Fz [N] 5000 km | 2090 |
| Mx [Nm] 5000 km | 81 |
| My [Nm] 5000 km | 97 |
| Mz [Nm] 5000 km | 96 |
| No-load torque [Nm] | 1.1 |
| **Geometrical moments of inertia of aluminum profile** | |
| Elastic modulus [N/mm<sup>2</sup>] | 70000 |
| Ix [mm<sup>4</sup>] | 561000 |
| Iy [mm<sup>4</sup>] | 3419000 |
| **Weight** | |
| Weight Per 100 mm [kg] | 0.9 |
| Basic Weight [kg] | 3.9 |