Product Specification Sheet

ActionJac 2SS-MSJ-UR 6:1

Call 800-321-7800 or visit us online at www.nookindustries.com to configure and order your ActionJac 2SS-MSJ-UR 6:1 today!

2D/3D CAD ONLINE

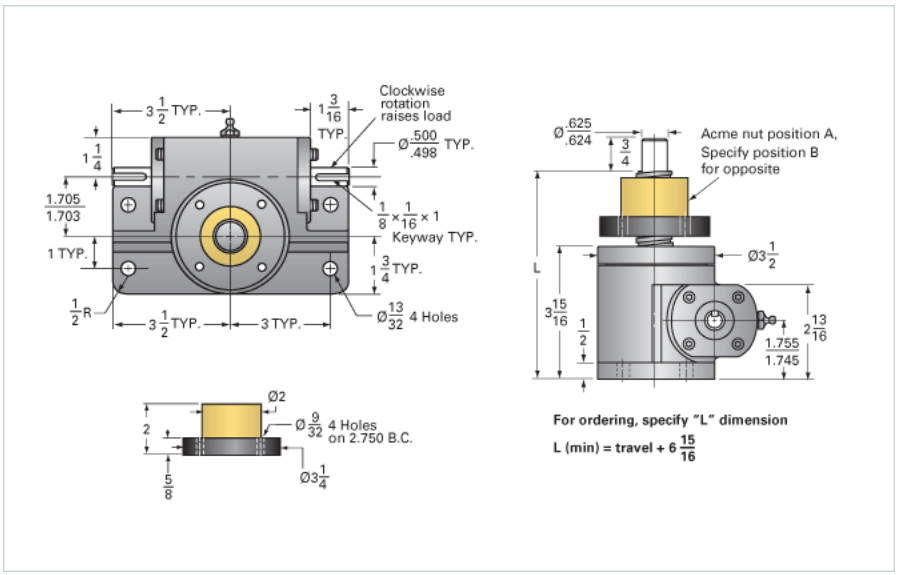

Details	
Capacity [Ton]	0.66
Gear Ratio	6:1
Turns of Worm per Inch Travel	24
Torque to Raise 1 lb. [in-lb]	0.0250
Lifting Screw Diameter [in]	1.00
Screw Lead [in]	0.250
Root Diameter [in]	0.698
Tare Drag Torque [in-lb]	4
Performance Specifications	
Maximum Allowable Input [hp]	2.00
Maximum Input Torque [in-lb]	33
Maximum Load at 1750 RPM	1320
Starting Torque	2 x Running Torque
Weight	
Base 0 Travel [lb]	17
Per Inch of Travel [lb]	0.50
Grease [lb]	0.5