Product Specification Sheet

NARC 15 MS Assembly

Call 800-321-7800 or visit us online at www.nookindustries.com to configure and order your NARC 15 MS Assembly today!

2D/3D CAD ONLINE

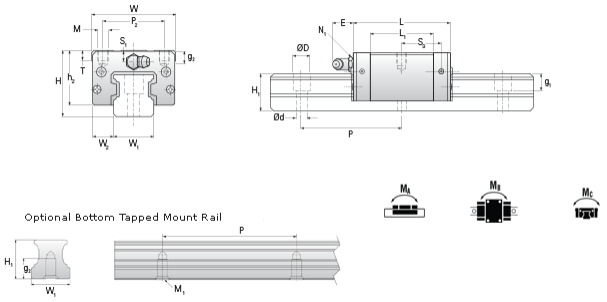

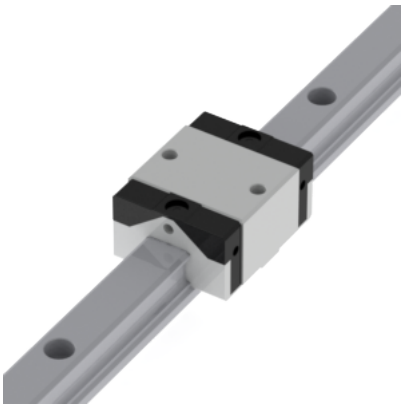

Dimensions	
H [mm]	24
W2 [mm]	9.5
Short Caged Ball Block Two Perpendiculare Mounting Holes (Runner Block)Details	
Size [mm]	15
(Runner Block)Dimensions	
W [mm]	34
L [mm]	40.4
L1 [mm]	26
h2 [mm]	20.7
P2 [mm]	26
M1 [mm]	-
M × g2	M4 x 7
T [mm]	6
N1	M3 x 6.5
N2	M3 x 6
N3 [O-Ring Seal]	P3
E [mm]	4.5
S1 [mm]	4.5
S2 [mm]	7.5
S3 [mm]	15.7
S4 [mm]	16.8
(Runner Block)Forces and Torques	
Basic Load Ratings C [kN]	7.7
Basic Load Ratings C0 [kN]	12.1
Static Moment Ratings-Ma [N-m]	50.0
Static Moment Ratings-Mb [N-m]	50.0
Static Moment Ratings-Mc [N-m]	100.0
(Runner Block)Weight	
Weight-Block [g]	96
Caged Ball Rail Top Mount (Top Mount Rail)Details	
Size [mm]	15
(Top Mount Rail)Dimensions	
W1 [mm]	15
H1 [mm]	15
P [mm]	60
D [mm]	7.5
d1 [mm]	4.5
g1 [mm]	5.3
(Top Mount Rail)Weight	
Weights-Rail [g/m]	1290.0
Caged Ball Rail Bottom Tapped Mount (Bottom Mount Rail)Details	
Size [mm]	15
(Bottom Mount Rail)Dimensions	
W1 [mm]	15
H1 [mm]	15
P [mm]	60
M x g3	M5 x 8
(Bottom Mount Rail)Weight	
Weights-Rail [g/m]	1290.0