Product Specification Sheet

NMR 9MN ZZ Assembly

Call 800-321-7800 or visit us online at www.nookindustries.com to configure and order your NMR 9MN ZZ Assembly today!

2D/3D CAD ONLINE

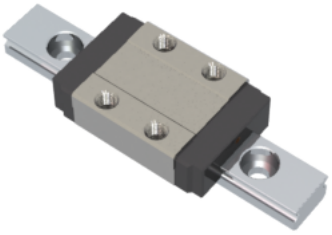

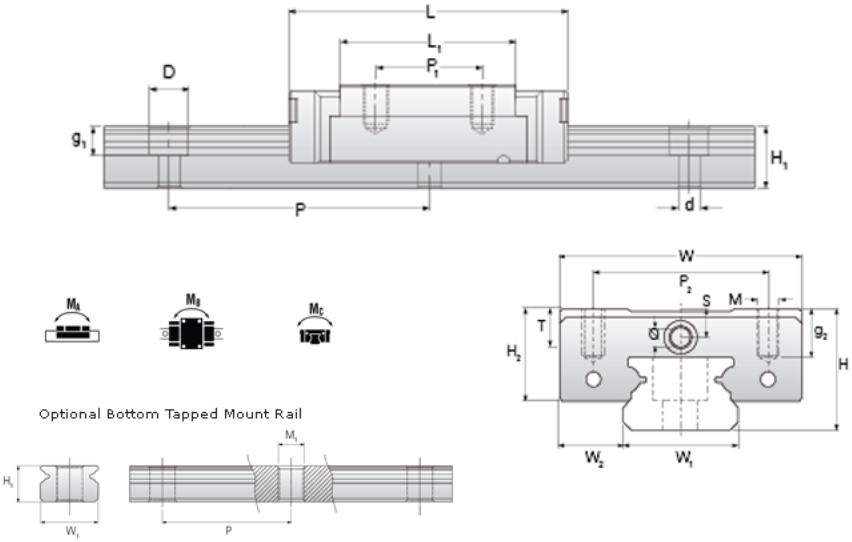

Dimensions	
H [mm]	10
W2 [mm]	5.5
Standard Miniature Block Four Mounting Holes (Runner Block)Details	
Size [mm]	9
(Runner Block)Dimensions	
W [mm]	20
L [mm]	30.6
L1 [mm]	20.5
h2 [mm]	7.8
P1 [mm]	10
P2 [mm]	15
M × g2	M3 × 3.0
Ø [mm]	1.3
S [mm]	2.2
T [mm]	3.3
(Runner Block)Forces and Torques	
Basic Load Ratings C [N]	1570
Basic Load Ratings C0 [N]	2495
Static Moment Ratings-Ma [N-m]	6.4
Static Moment Ratings-Mb [N-m]	6.4
Static Moment Ratings-Mc [N-m]	11.7
(Runner Block)Weight	
Weight-Block [g]	18
Standard Miniature Rail Top Mount (Top Mount Rail)Details	
Size [mm]	9
(Top Mount Rail)Dimensions	
H [mm]	10
W1 [mm]	9
H1 [mm]	5.5
P [mm]	20
D [mm]	6
d1 [mm]	3.5
g1 [mm]	3.5
(Top Mount Rail)Weight	
Weights-Rail [g/m]	301.0
Standard Miniature Rail Bottom Tapped Mount (Bottom Mount Rail)Details	
Size [mm]	9
(Bottom Mount Rail)Dimensions	
H1 [mm]	5.5
W1 [mm]	9
P [mm]	20
M1	M4 x 0.7
(Bottom Mount Rail)Weight	
Weights-Rail [g/m]	301.0