Product Specification Sheet

G3-MSJ-UR 2:1

Call 800-321-7800 or visit us online at www.nookindustries.com to configure and order your G3-MSJ-UR 2:1 today!

2D/3D CAD ONLINE

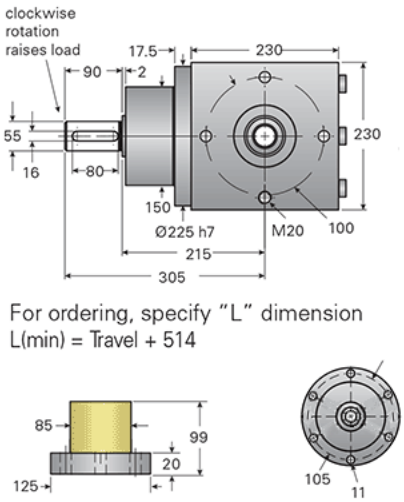

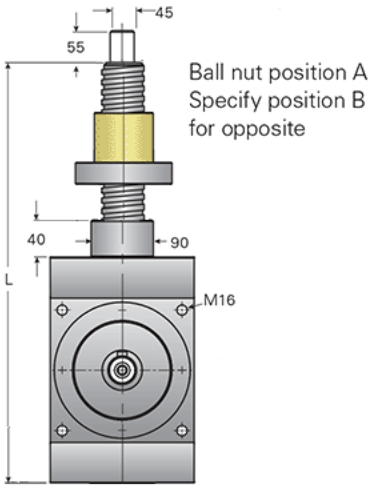

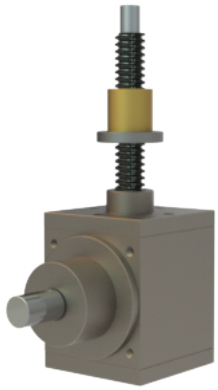

Details	
Capacity [kN]	117
Gear Ratio	2:1
Raise for One Turn of Worm [mm]	4.50
Torque to Raise 1 kN [Nm]	2.05
Tare Drag Torque [Nm]	4.40
Lifting Screw Diameter [mm]	60
Screw Lead [mm]	9
BackDrive Holding Torque [Nm]	13.65
Performance Specifications	
Maximum Input Torque [Nm]	1600
Weight	
Base 0 Travel [kg]	36.30
Per 100mm of Travel [kg]	2.12
Grease [kg]	1.00