Product Specification Sheet

G2-MSJ-U 3:1

Call 800-321-7800 or visit us online at www.nookindustries.com to configure and order your G2-MSJ-U 3:1 today!

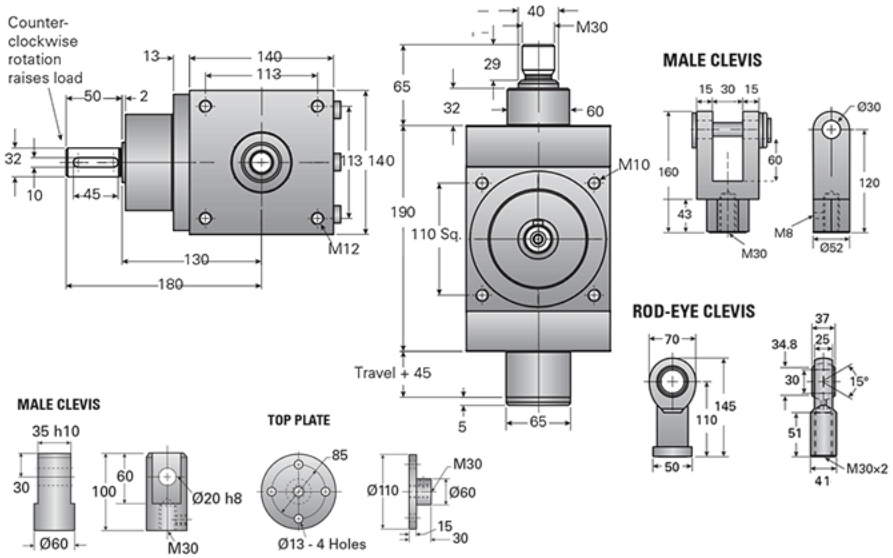

Details	
Capacity [kN]	44.5
Gear Ratio	3:1
Raise for One Turn of Worm [mm]	2.30
Torque to Raise 1 kN [Nm]	0.93
Tare Drag Torque [Nm]	2.20
Lifting Screw Diameter [mm]	40
Screw Lead [mm]	7
BackDrive Holding Torque [Nm]	3.73
Performance Specifications	
Maximum Input Torque [Nm]	175
Weight	
Base 0 Travel [kg]	15.90
Per 100mm of Travel [kg]	0.81
Grease [kg]	0.45