Product Specification Sheet

PA05-I 0750-0200 SRT RA V

Call 800-321-7800 or visit us online at www.nookindustries.com to configure and order your PA05-I 0750-0200 SRT RA V today!

2D/3D CAD ONLINE

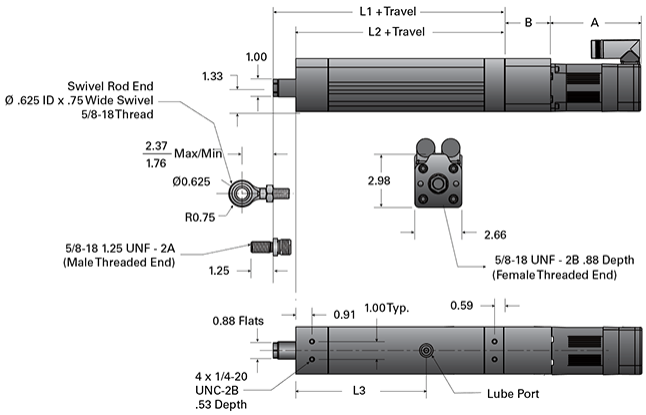

Details	
Screw	0750-0200 SRT RA
Ball Circle Diameter [in]	0.750
Screw Lead [in]	0.200
Performance Specifications	
Lead Accuracy +/- [in/in]	0.004
Efficiency [%]	>90
Ball Nut Max Velocity [in/min]	600
Max Capacity [lb]	1000
Dynamic Load [lb] (Ball screw L10 life based on 1 mil. Inches of travel)	1100
Dimensions	
L1 + Travel [in]	9.05
L2 + Travel [in]	7.78
L3 [in]	7.34
A (w/out Reducer, No Brake) [in]	5.42
A (w/out Reducer, Brake) [in]	6.96
A (w/Reducer, No Brake) [in]	8.98
A (w/Reducer, Brake) [in]	10.52
B (w/out Reducer) [in]	2.44
B (w/Reducer) [in]	2.86