Product Specification Sheet

MBN20x20R-4CW

Call 800-321-7800 or visit us online at www.nookindustries.com to configure and order your MBN20x20R-4CW today!

2D/3D CAD ONLINE

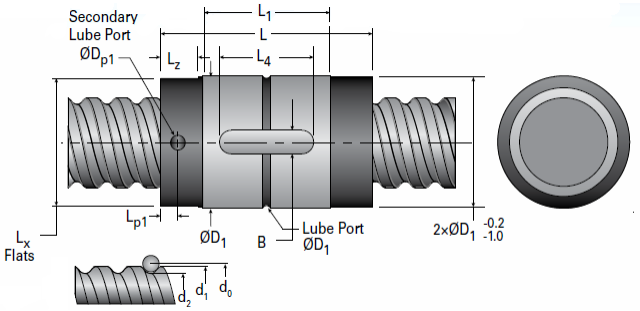

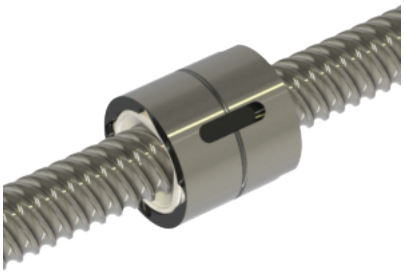

Product Info	
Nominal Rod Diameter [mm]	20
Material	Alloy
Thread Direction	RH
Details	
Lead [mm]	20
Active Turns	4
Nominal Ball Dia. [mm]	3.500
Screw Weight [kg/m]	1.94
Nut Weight [kg]	0.15
End Code for Types 1,2, and 3	15
End Code for Types 4	10
End Code for Types 5	15
End Code for Types 6	15
End Code for Types 7	15
Performance Specifications	
Dynamic Load Ca [N]	12110
Static Load [N]	22010
Linear Speed (Based on DN Values) [mm/min]	70000
Screw Dimensions	
d0 [mm]	20
d1 [mm]	19.26
d2 [mm]	16.38
Nut Dimensions	
D1 (g6) [mm]	36
L1 [mm]	36
Dp [mm]	1.2
Lp1 [mm]	-
Dp1 [mm]	-
L [mm]	36
Lx [mm]	35
Lz [mm]	5
L4 [mm]	20
B (P9) [mm]	5