Product Specification Sheet

NIA5-115-10-B

Call 800-321-7800 or visit us online at www.nookindustries.com to configure and order your NIA5-115-10-B today!

2D/3D CAD ONLINE

	Retracted Length A (±3.8mm)						B	C
Travel (in)	4	6	8	12	18	24	—	—
Travel (±5mm)	102	153	203	305	457	610	—	—
Standard	302	353	404	506	735	888	64.3	17.5
With Potentiometer	342	393	444	546	775	928	104.5	17.5
With Limit Switch*	399	450	501	680	832	985	104.5	23.5

* with or without potentiometer

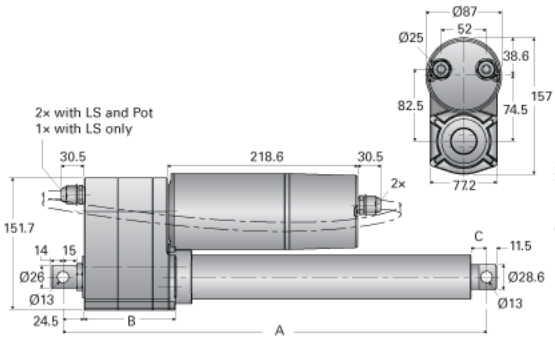

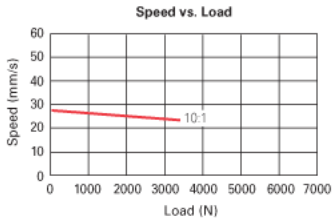

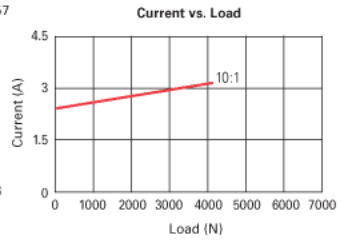

Product Info	
Screw Type	Ball Screw
Details	
Voltage [VAC]	115
Hertz [Hz]	60
Gear Ratio	10:1
Speed At No Load [mm/s]	21.8
Speed At Full Load [mm/s]	17.5
Load Capacity Dynamic Load [N]	3500
Load Capacity Static Load [N]	13600
Amps	3.1
Performance Specifications	
Duty Cycle [% of 5 Minutes]	25
Rated Cycles At Full Load	10000
Protection Class	IP65