Product Specification Sheet

ND8-24-20-A

Call 800-321-7800 or visit us online at www.nookindustries.com to configure and order your ND8-24-20-A today!

2D/3D CAD ONLINE

	Retracted Length A (±3.8mm)							B	C
Travel (in)	4	6	8	10	12	18	24	—	—
Travel (±5mm)	102	153	203	254	305	457	610	—	—
Standard	262	313	364	415	465	668	821	64.3	17.5
With Potentiometer	302	353	404	455	506	708	861	104.5	17.5
With Limit Switch*	359	410	460	511	613	765	918	104.5	23.5

* with or without potentiometer

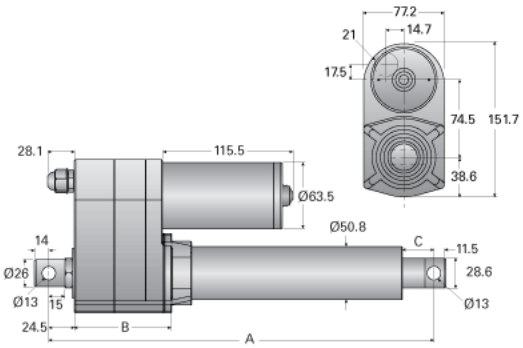

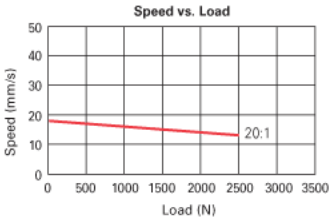

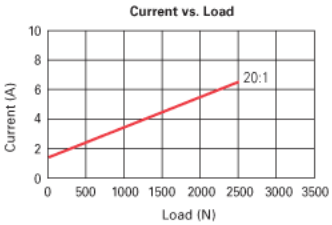

Product Info	
Screw Type	Acme Screw
Details	
Voltage [VDC]	24
Gear Ratio	20:1
Speed At No Load [mm/s]	17
Speed At Full Load [mm/s]	14.3
Load Capacity Dynamic Load [N]	2500
Load Capacity Static Load [N]	4500
Amps	6.5
Performance Specifications	
Duty Cycle [% of 5 Minutes]	25
Rated Cycles At Full Load	10000
Protection Class	IP65