Product Specification Sheet

ELZQ 80S h7 WAC Extended Carriage

Call 800-321-7800 or visit us online at www.nookindustries.com to configure and order your ELZQ 80S h7 WAC Extended Carriage today!

2D/3D CAD ONLINE

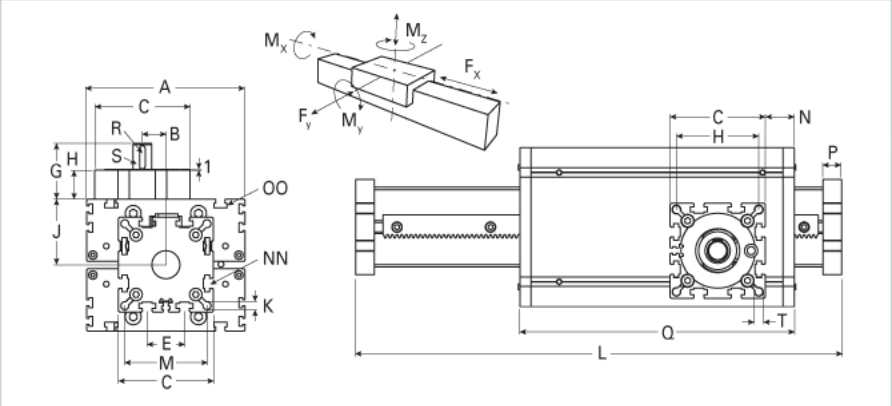

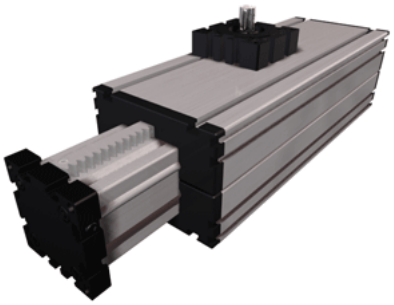

Details	
Size	80S
Dimensions	
Basic Length L [mm]	466
A [mm]	190
B [mm]	25.5
C [mm]	102
D [mm]	80
E [mm]	40
G [mm]	62.5
H [mm]	33
J [mm]	71
K [mm]	8.5
M [mm]	88
N [mm]	25
NN	M10
OO	M8
P [mm]	20
Q [mm]	420
T	M10
Speed	
Speed Maximum [m/s]	4
Forces and Torques	
Fx dynamic [N]	780
Fy dynamic [N]	3600
Fz dynamic [N]	1800
Mx dynamic [Nm]	140
My dynamic [Nm]	230
Mz dynamic [Nm]	220
Fx static [N]	940
Fy static [N]	4600
Fz static [N]	3000
Mx static [Nm]	170
My static [Nm]	270
Mz static [Nm]	300
Geometrical moments of inertia of aluminum profile	
Elastic modulus [N/mm²]	70000
Ix [mm⁴]	1899000
Iy [mm⁴]	1897000
Weight	
Additional Weight per 100 mm [kg]	1.19
Basic Weight [kg]	12.0