Product Specification Sheet

RAD-3066-HD

Call 800-321-7800 or visit us online at www.nookindustries.com to configure and order your RAD-3066-HD today!

2D/3D CAD ONLINE

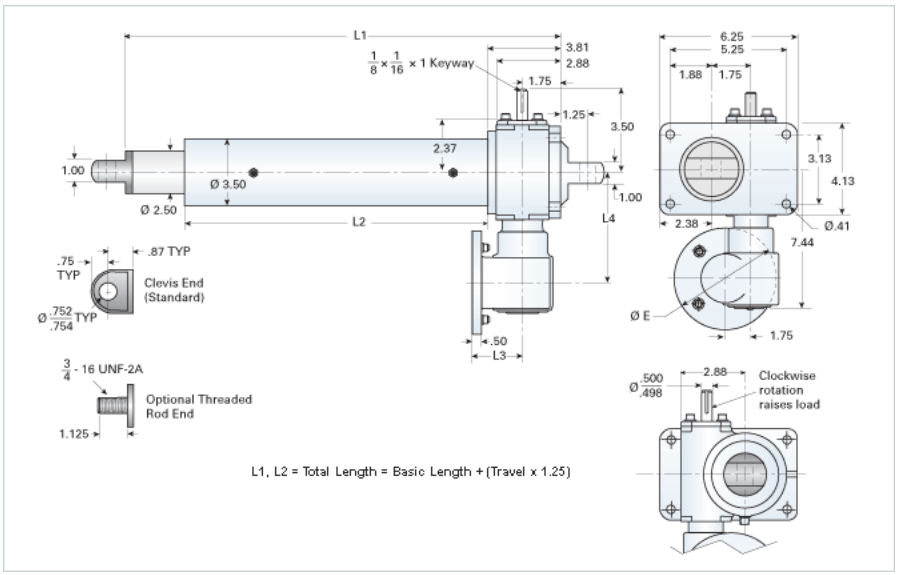

Details	
Gear Ratio Primary Reduction	6:1
Gear Ratio Secondary Reduction	6:1
Max Capacity [lb]	6000
Input Turns Per Inch Of Travel	87.18
Torque To Raise 1 lb. [in-lb]	0.0041
Ball Screw	1171-0413 SRT RA
Screw Lead [in]	0.413
Root Diameter [in]	0.870
Max HP [hp]	0.5
Weight	
Basic Weight [lb]	51
Per Inch of Travel [lb]	1.31
Tube Dimensions	
L1 Basic Length [in]	12.44
L2 Basic Length [in]	7.31
NEMA 56C Dimensions	
L3 [in]	3.69
L4 [in]	5.63
E [in]	6.69
NEMA 180TC Dimensions	
L3 [in]	-
L4 [in]	-
F [in]	-