Product Specification Sheet

DD-5024-A3

Call 800-321-7800 or visit us online at www.nookindustries.com to configure and order your DD-5024-A3 today!

2D/3D CAD ONLINE

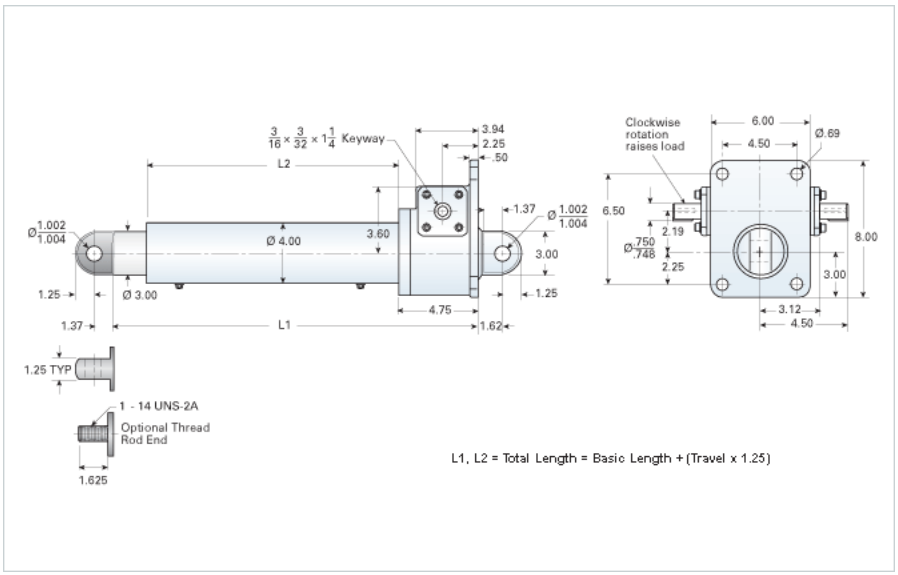

Details	
Gear Ratio	24:1
Max Capacity [lb]	10000
Input Turns Per Inch Of Travel	64
Torque To Raise 1 lb. [in-lb]	0.0144
Acme Screw	1 1/2-2 2/3 RA
Screw Lead [in]	0.375
Root Diameter [in]	1.066
Max HP [hp]	0.75
Weight	
Basic Weight [lb]	53
Per Inch of Travel [lb]	1.87
Tube Dimensions	
L1 Basic Length [in]	12.38
L2 Basic Length [in]	6.06
NEMA 42 Dimensions	
L3 [in]	-
E [in]	-
F [in]	-
NEMA 48 Dimensions	
L3 [in]	-
E [in]	-
F [in]	-
NEMA 56C Dimensions	
L3 [in]	7.25
E [in]	6.75
F [in]	3.75
NEMA 182TC Dimensions	
L3 [in]	8.00
E [in]	9.25
F [in]	3.75
NEMA 184TC Dimensions	
L3 [in]	-
E [in]	-
F [in]	-
NEMA 213TC Dimensions	
L3 [in]	-
E [in]	-
F [in]	-