Product Specification Sheet

RAD-2562-HL/10XX

Call 800-321-7800 or visit us online at www.nookindustries.com to configure and order your RAD-2562-HL/10XX today!

2D/3D CAD ONLINE

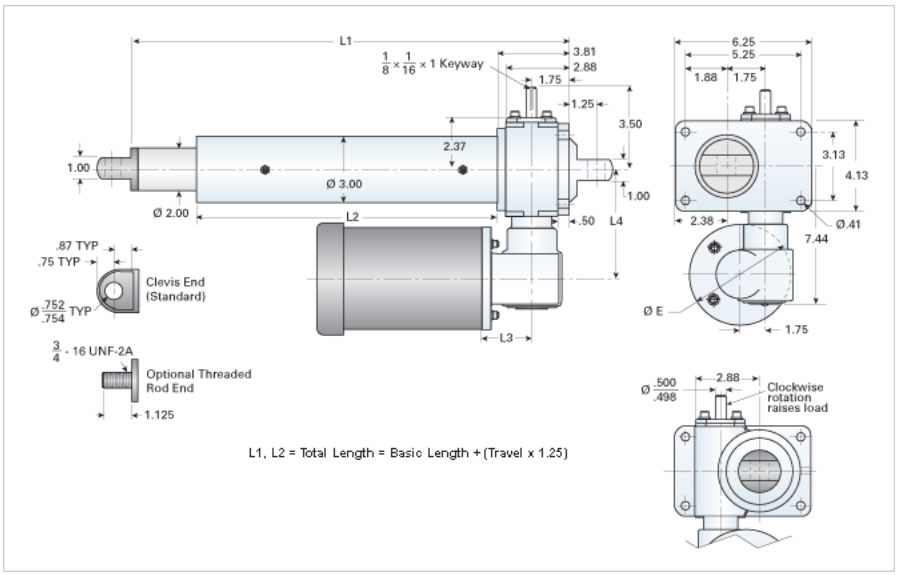

Performance Specifications	
Travel Rate [in/min]	24
Dynamic Capacity [lb]	5000
Rated Life [in]	80000
Motor Horse Power	1
Maximum Rod Reaction Torque [in-lb]	885
Std. Brake Torque [ft-lb]	6
Approximate Stopping Distance No Load [in]	0.04
Approximate Stopping Distance Full Load [in]	0.4
Details	
Gear Ratio Primary Reduction	6:1
Gear Ratio Secondary Reduction	12:1
Input Turns Per Inch Of Travel	72
Torque To Raise 1 lb. [in-lb]	0.0037
Max Capacity [lb]	5000
Max HP [hp]	1
Weight	
Basic Weight [lb]	46
Per Inch of Travel [lb]	1.05
Tube Dimensions	
L1 Basic Length [in]	12.44
L2 Basic Length [in]	7.13
NEMA 56C Dimensions	
L3 [in]	3.69
L4 [in]	5.63
E [in]	6.69
NEMA 180TC Dimensions	
L3 [in]	-
L4 [in]	-
F [in]	-