Product Specification Sheet

DSR 160 Extended Carriage

Call 800-321-7800 or visit us online at www.nookindustries.com to configure and order your DSR 160 Extended Carriage today!

2D/3D CAD ONLINE

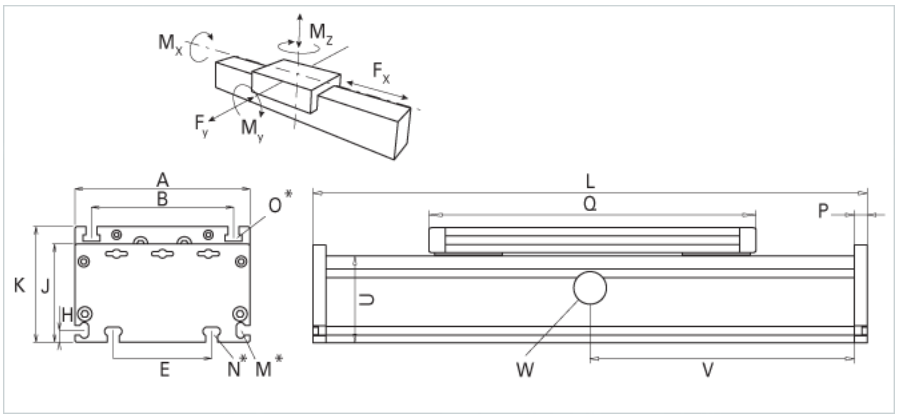

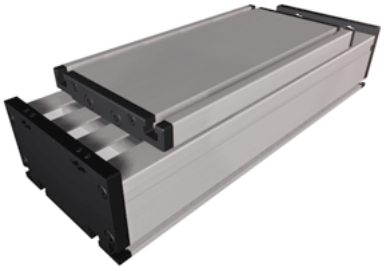

Details	
Size	160
Dimensions	
Basic Length L [mm]	270
A [mm]	160
B [mm]	130
E [mm]	90
H [mm]	11
J [mm]	90
K [mm]	106
M	M6
N	M8
O	M8
P [mm]	12
Q [mm]	230
U [mm]	80
Speed	
Speed Maximum [m/s]	5
Forces and Torques	
Fy [N] 10000 km	1775
Fz [N] 10000 km	4189
Mx [Nm] 10000 km	224
My [Nm] 10000 km	225
Mz [Nm] 10000 km	238
Fy [N] 5000 km	2236
Fz [N] 5000 km	5278
Mx [Nm] 5000 km	282
My [Nm] 5000 km	283
Mz [Nm] 5000 km	300
Geometrical moments of inertia of aluminum profile	
Elastic modulus [N/mm²]	70000
Ix [mm⁴]	2130000
Iy [mm⁴]	1230000
Weight	
Additional Weight per 100 mm [kg]	1.50
Basic Weight [kg]	7.0