Product Specification Sheet

DSZ 160 Extended Carriage

Call 800-321-7800 or visit us online at www.nookindustries.com to configure and order your DSZ 160 Extended Carriage today!

2D/3D CAD ONLINE

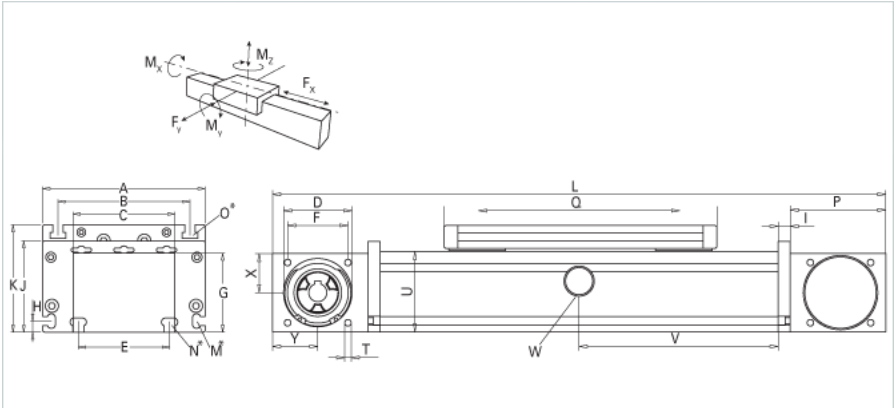

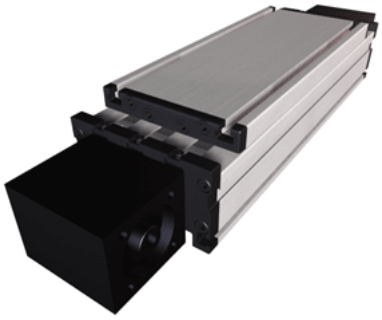

Details	
Size	160
Belt	8M30/8M50
mm/Rev	176/224
Number of Teeth	22/28
Pully Diameter [mm]	56.0
Dimensions	
Basic Length L [mm]	470
A [mm]	160
B [mm]	130
C [mm]	100
D [mm]	68
E [mm]	90
F [mm]	60
G [mm]	78
H [mm]	11
I [mm]	12
J [mm]	90
K [mm]	106
M	M6
N	M8
O	M8
P [mm]	95
Q [mm]	230
T	M8
U [mm]	80
X [mm]	39
Y [mm]	45
Speed	
Speed Maximum [m/s]	5
Forces and Torques	
No-load torque with cover bands	2.1
No-load torque without cover bands	1.5
Fx [N] 10000 km	1800
Fy [N] 10000 km	3900
Fz [N] 10000 km	5020
Mx [Nm] 10000 km	255
My [Nm] 10000 km	262
Mz [Nm] 10000 km	258
Fx [N] 5000 km	1900
Fy [N] 5000 km	5570
Fz [N] 5000 km	7050
Mx [Nm] 5000 km	358
My [Nm] 5000 km	369
Mz [Nm] 5000 km	364
Tensile force 0.2 sec [N]	2090
Tensile force permanent [N]	1900
Geometrical moments of inertia of aluminum profile	
Elastic modulus [N/mm^2]	70000
Ix [mm^4]	2130000
Iy [mm^4]	12330000
Weight	
Additional Weight per 100 mm [kg]	1.90

Basic Weight [kg]	12.0