Product Specification Sheet

DSZ 120

Call 800-321-7800 or visit us online at www.nookindustries.com to configure and order your DSZ 120 today!

2D/3D CAD ONLINE

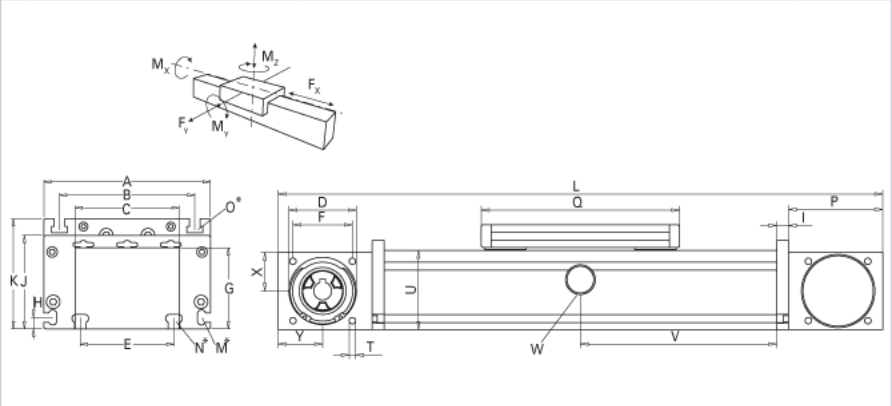

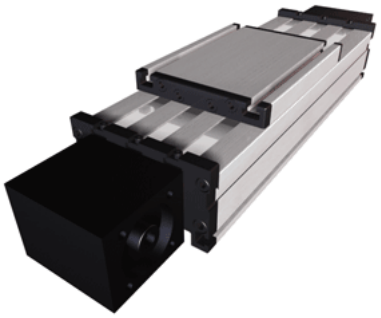

Details	
Size	120
Belt	5M25/8M50
mm/Rev	130/176
Number of Teeth	26/22
Dimensions	
Basic Length L [mm]	330
A [mm]	120
B [mm]	96
C [mm]	80
D [mm]	47
E [mm]	78
F [mm]	42
G [mm]	60
H [mm]	10
I [mm]	10
J [mm]	68
K [mm]	79
M	M5
N	M6
O	M6
P [mm]	70
Q [mm]	156
T	M6
U [mm]	60
X [mm]	30
Y [mm]	35
Speed	
Speed Maximum [m/s]	5
Forces and Torques	
No-load torque with cover bands	1.6
No-load torque without cover bands	1.2
Fx [N] 10000 km	800
Fy [N] 10000 km	1405
Fz [N] 10000 km	1650
Mx [Nm] 10000 km	64
My [Nm] 10000 km	77
Mz [Nm] 10000 km	76
Fx [N] 5000 km	894
Fy [N] 5000 km	1776
Fz [N] 5000 km	2090
Mx [Nm] 5000 km	81
My [Nm] 5000 km	97
Mz [Nm] 5000 km	96
Tensile force 0.2 sec [N]	1000
Tensile force permanent [N]	900
Geometrical moments of inertia of aluminum profile	
Elastic modulus [N/mm²]	70000
Ix [mm⁴]	561000
Iy [mm⁴]	3419000
Weight	
Additional Weight per 100 mm [kg]	0.85
Basic Weight [kg]	5.1
Values for Calulating Inertias	

Pulley Material	Aluminum
Pulley Diameter [mm]	41.38
Effective Pulley Width [mm]	80
Belt Weight [kg/m]	0.123
Standard Carriage Weight [kg]	0.92
No-load torque (w/cover bands) [Nm]	1.6
No-load torque (w/o cover bands) [Nm]	1.2
Friction Coefficient	0.01