Product Specification Sheet

ELSD 40 WAC Wide Belt Extended Carriage

Call 800-321-7800 or visit us online at www.nookindustries.com to configure and order your ELSD 40 WAC Wide Belt Extended Carriage today!

2D/3D CAD ONLINE

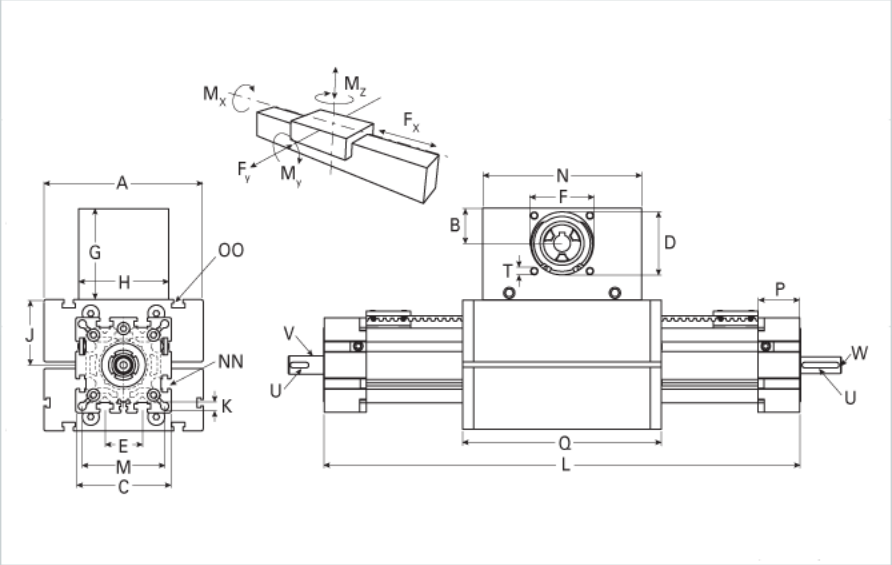

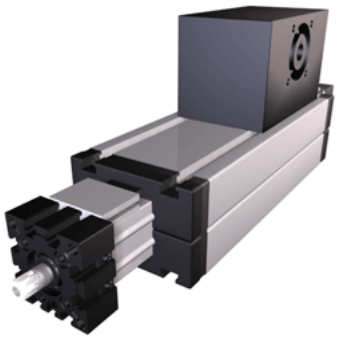

Details	
Size	40
Belt	5M25
mm/Rev	130
Number of Teeth	26
Pully Diameter [mm]	41.4
Dimensions	
Basic Length L [mm]	361
A [mm]	100
B [mm]	30
C [mm]	58
D [mm]	47
E [mm]	25
F [mm]	42
G [mm]	83
H [mm]	80
I [mm]	-
J [mm]	35
K [mm]	6.5
M [mm]	47
MM	-
N [mm]	130
OO	M6
P [mm]	25
Q [mm]	273
T	M6
X [mm]	-
V (Z Drive End) [mm]	10 x 20
U (Z Drive End) [mm]	3x3x10
V (Z Load End) [mm]	12 x 20
U (Z Load End) [mm]	4x4x10
W (Z Load End) [mm]	M6x12
Shaft Diameter and Length [mm]	10X 27
Key	3x3x25
Speed	
Speed Maximum [m/s]	4
Forces and Torques	
No-load torque Stiction torque Mr [Nm]	0.1
No-load torque [Nm]	0.7
Tensile force 0.2 sec [N]	1000
Tensile force permanent [N]	900
Fd [N]	50
Mr [Nm]	5
Fx dynamic [N]	800
Fy dynamic [N]	700
Fz dynamic [N]	650
Mx dynamic [Nm]	20

My dynamic [Nm]	18
Mz dynamic [Nm]	25
Fx static [N]	894
Fy static [N]	1200
Fz static [N]	900
Mx static [Nm]	25
My static [Nm]	32
Mz static [Nm]	35
Geometrical moments of inertia of aluminum profile	
Elastic modulus [N/mm^2]	70000
Ix [mm^4]	132000
Iy [mm^4]	134000
Weight	
Additional Weight per 100 mm [kg]	0.40
Basic Weight [kg]	2.7