Product Specification Sheet

ELT 40 WAC

Call 800-321-7800 or visit us online at www.nookindustries.com to configure and order your ELT 40 WAC today!

2D/3D CAD ONLINE

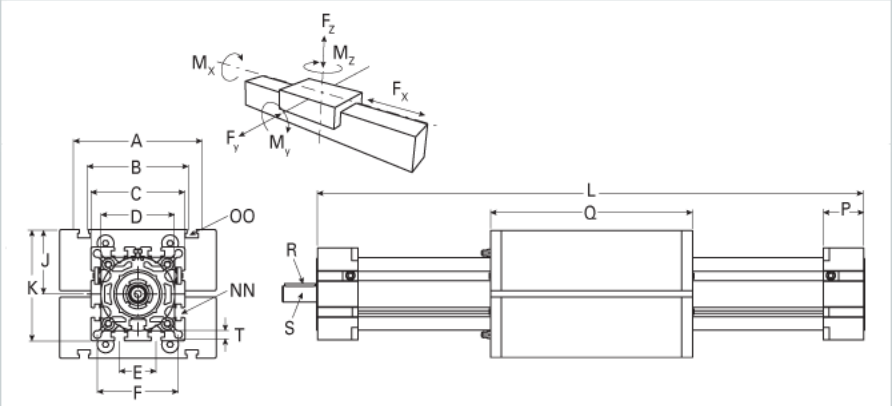

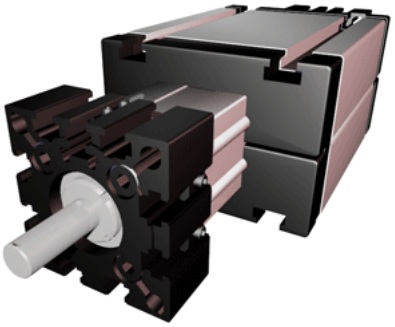

Details	
Size	40
Screw Options	18x4/18x8
Screw Type	Trapezoidal
Dimensions	
Basic Length L [mm]	191
A [mm]	100
B [mm]	66
C [mm]	58
D [mm]	48x1
E [mm]	18
F [mm]	47
G [mm]	-
H [mm]	-
J [mm]	35
K [mm]	64
MM	-
NN	M6
OO	M6
P [mm]	25
Q [mm]	138
R [mm]	3X3X25
S Diameter x Length [mm]	10x27
T-Diameter [mm]	6.5
Forces and Torques	
No-load torque [Nm	0.4
Fx dynamic [N]	1200
Fy dynamic [N]	700
Fz dynamic [N]	650
Mx dynamic [Nm]	20
My dynamic [Nm]	18
Mz dynamic [Nm]	25
Fx static [N]	1500
Fy static [N]	1200
Fz static [N]	900
Mx static [Nm]	25
My static [Nm]	32
Mz static [Nm]	35
Geometrical moments of inertia of aluminum profile	
Elastic modulus [N/mm²]	70000
Ix [mm⁴]	132000
Iy [mm⁴]	134000
Weight	
Additional Weight per 100 mm [kg]	0.37
Basic Weight [kg]	1.7