Product Specification Sheet

NU45ER Assembly

Call 800-321-7800 or visit us online at www.nookindustries.com to configure and order your NU45ER Assembly today!

2D/3D CAD ONLINE

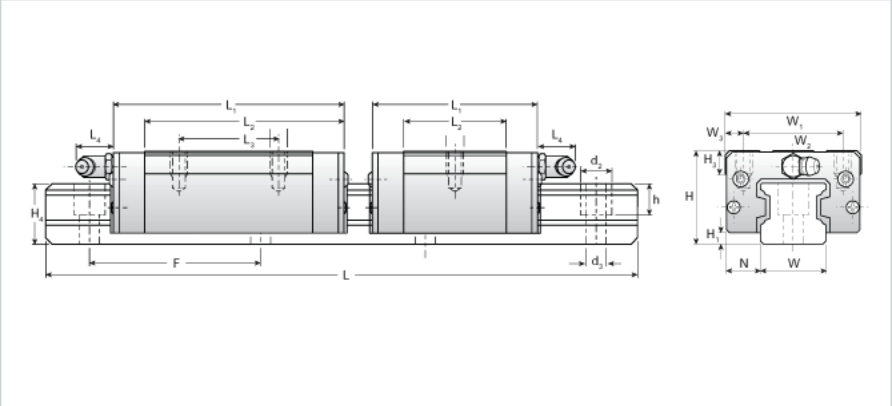

Dimensions	
H [mm]	60
H1 [mm]	11
N [mm]	20.5
Metric Profile Rail	
(Rail)Details	
Size [mm]	45
Type	Compact
(Rail)Dimensions	
d2 [mm]	17.5
d3 [mm]	11
h [mm]	20.5
H4 [mm]	42
F [mm]	105
W [mm]	45
Maximum Length [mm]	3000
(Rail)Weight	
Weights-Rail [kg/m]	12.9
Metric Runner Block, Heavy Load, Compact Type, 4 Tapped Holes	
(Runner Block)Details	
Size [mm]	45
(Runner Block)Dimensions	
L1 [mm]	139
L2 [mm]	102
L3 [mm]	60
L4 [mm]	14
H3 [mm]	15
M1 x l	M10X16
W1 [mm]	86
W2 [mm]	60
W3 [mm]	13
(Runner Block)Forces and Torques	
Basic Load Ratings C [kN]	60.20
Basic Load Ratings C [lbf]	13532
Basic Load Ratings C0 [kN]	95.71
Basic Load Ratings C0 [lbf]	21510
Static Moment Ratings-Ma [kN-m]	1.30
Static Moment Ratings-Ma [lb-in]	11544
Static Moment Ratings-Mb [kN-m]	1.30
Static Moment Ratings-Mb [lb-in]	11544
Static Moment Ratings-Mc [kN-m]	2.30
Static Moment Ratings-Mc [lb-in]	20398
(Runner Block)Weight	
Weight-Block [kg]	2.20
(Runner Block)Grease Fitting	
Grease Fitting Part Number	B-PT 1/8